State of Florida

Public Service Commission

CAPITAL CIRCLE OFFICE CENTER • 2540 SHUMARD OAK BOULEVARD
TALLAHASSEE, FLORIDA 32399-0850

-M-E-M-O-R-A-N-D-U-M-

DATE: August 26, 2015

TO: Carlotta S. Stauffer, Commission Clerk, Office of Commission Clerk

FROM: Keino Young, Attorney Supervisor, Office of the General Counsel

RE: Docket No. 120196-EQ – Petition for certification as a qualifying facility pursuant to Rule 25-17.080, F.A.C., by Buckeye Florida Limited Partnership.

The above-referenced docket was closed by the Commission on September 6, 2012, after the Petition of Buckeye Florida Limited Partnership was withdrawn.

The attached letters are from Timothy Perry, Oertel, Fernandez, Bryant & Atkinson, P.A., providing notice of Buckeye's filing the petition with the Federal Energy Regulatory Commission. The letters were found in the files of former employee Pauline Robinson, and should be included in the Commission's Case Management System for Docket No. 120196-EQ.

The docket may be closed administratively after the letters are included since no further action is required.

KY:csc
Attachments

OERTEL, FERNANDEZ, BRYANT & ATKINSON, P.A.

MAILING ADDRESS: POST OFFICE BOX 1110 | TALLAHASSEE, FLORIDA 32302-1110

OFFICES: 301 S. BRONOUGH STREET, FIFTH FLOOR | TALLAHASSEE, FLORIDA 32301
PHONE: 850-521-0700 | FAX: 850-521-0720 | WWW.OHFC.COM

ATTORNEYS:
TIMOTHY P. ATKINSON
M. CHRISTOPHER BRYANT
C. ANTHONY CLEVELAND
SEGUNDO J. FERNANDEZ
PRESTON MCLANE
ANGELA FARFORD
KENNETH G. OERTEL
TIMOTHY J. PERRY

October 25, 2012

Via Overnight Delivery

Ms. Pauline Robinson
Florida Public Service Commission
2540 Shumard Oak Boulevard
Tallahassee, Florida 32399-0850

Re: Letter of October 24, 2012

Dear Ms. Robinson,

Enclosed please find a letter dated October 24, 2012 which was sent out yesterday with the wrong date (September 24, 2012). This was a clerical error on my assistant's part and we apologize for any inconvenience or confusion this might have caused.

Should you have any questions, please feel free to contact me.

Best regards,

Timothy J. Perry

Enclosure
cc: Sheila Jordan Cunningham, Buckeye
Brad Ottinger, Buckeye
Pat Barbaree, Buckeye
Mr. S. Curtis Kiser, FPSC

OERTEL, FERNANDEZ, BRYANT & ATKINSON, P.A.

MAILING ADDRESS: POST OFFICE BOX 1110 | TALLAHASSEE, FLORIDA 32302-1110

OFFICES: 301 S. BRONOUGH STREET, FIFTH FLOOR | TALLAHASSEE, FLORIDA 32301
PHONE: 850-521-0700 | FAX: 850-521-0720 | WWW.OHFC.COM

ATTORNEYS:
TIMOTHY P. ATKINSON
M. CHRISTOPHER BRYANT
C. ANTHONY CLEVELAND
SEGUNDO J. FERNANDEZ
PRESTON MCLANE
ANGELA FARFORD
KENNETH G. OERTEL
TIMOTHY J. PERRY

October 24, 2012

Via Overnight Delivery
FEDEX # 7939 2242 7757

Ms. Pauline Robinson
Florida Public Service Commission
2540 Shumard Oak Boulevard
Tallahassee, Florida 32399-0850

Re: PSC Docket 120196-EQ, Buckeye Florida Limited Partnership's Petition for Certification as a Qualifying Facility; FERC Docket QF13-51-000, Buckeye Florida Limited Partnership's Self- Certification as a Qualifying Cogeneration Facility

Dear Ms. Robinson,

This letter is to follow-up on my correspondence of August 30, 2012. Enclosed please find notice of Buckeye Florida Limited Partnership's Self-Certification as a Qualifying Cogeneration Facility with the Federal Energy Regulatory Commission in FERC Docket QF13-51-000.

Should you have any questions, please feel free to contact me.

Best regards,

Timothy J. Perry

Enclosure
cc: Sheila Jordan Cunningham, Buckeye
Brad Ottinger, Buckeye
Pat Barbaree, Buckeye
Mr. S. Curtis Kiser, FPSC

FEDERAL ENERGY REGULATORY COMMISSION
WASHINGTON, DC

OMB Control # 1902-0075
Expiration 5/31/2013

Form 556 Certification of Qualifying Facility (QF) Status for a Small Power Production or Cogeneration Facility

General

Questions about completing this form should be sent to Form556@ferc.gov. Information about the Commission's QF program, answers to frequently asked questions about QF requirements or completing this form, and contact information for QF program staff are available at the Commission's QF website, www.ferc.gov/QF. The Commission's QF website also provides links to the Commission's QF regulations (18 C.F.R. § 131.80 and Part 292), as well as other statutes and orders pertaining to the Commission's QF program.

Who Must File

Any applicant seeking QF status or recertification of QF status for a generating facility with a net power production capacity (as determined in lines 7a through 7g below) greater than 1000 kW must file a self-certification or an application for Commission certification of QF status, which includes a properly completed Form 556. Any applicant seeking QF status for a generating facility with a net power production capacity 1000 kW or less is exempt from the certification requirement, and is therefore not required to complete or file a Form 556. *See* 18 C.F.R. § 292.203.

How to Complete the Form 556

This form is intended to be completed by responding to the items in the order they are presented, according to the instructions given. If you need to back-track, you may need to clear certain responses before you will be allowed to change other responses made previously in the form. If you experience problems, click on the nearest help button ( ) for assistance, or contact Commission staff at Form556@ferc.gov.

Certain lines in this form will be automatically calculated based on responses to previous lines, with the relevant formulas shown. You must respond to all of the previous lines within a section before the results of an automatically calculated field will be displayed. If you disagree with the results of any automatic calculation on this form, contact Commission staff at Form556@ferc.gov to discuss the discrepancy before filing.

You must complete all lines in this form unless instructed otherwise. Do not alter this form or save this form in a different format. Incomplete or altered forms, or forms saved in formats other than PDF, will be rejected.

How to File a Completed Form 556

Applicants are required to file their Form 556 electronically through the Commission's eFiling website (see instructions on page 2). By filing electronically, you will reduce your filing burden, save paper resources, save postage or courier charges, help keep Commission expenses to a minimum, and receive a much faster confirmation (via an email containing the docket number assigned to your facility) that the Commission has received your filing.

If you are simultaneously filing both a waiver request and a Form 556 as part of an application for Commission certification, see the "Waiver Requests" section on page 3 for more information on how to file.

Paperwork Reduction Act Notice

This form is approved by the Office of Management and Budget (OMB Control No. 1902-0075, expiration 05/31/2013). Compliance with the information requirements established by the FERC Form No. 556 is required to obtain or maintain status as a QF. See 18 C.F.R. § 131.80 and Part 292. An agency may not conduct or sponsor, and a person is not required to respond to, a collection of information unless it displays a currently valid OMB control number. The estimated burden for completing the FERC Form No. 556, including gathering and reporting information, is as follows: 3 hours for self-certification of a small power production facility, 8 hours for self-certifications of a cogeneration facility, 6 hours for an application for Commission certification of a small power production facility, and 50 hours for an application for Commission certification of a cogeneration facility. Send comments regarding this burden estimate or any aspect of this collection of information, including suggestions for reducing this burden, to the following: Information Clearance Officer, Office of the Executive Director (ED-32), Federal Energy Regulatory Commission, 888 First Street N.E., Washington, DC 20426; and Desk Officer for FERC, Office of Information and Regulatory Affairs, Office of Management and Budget, Washington, DC 20503 (oira_submission@omb.eop.gov). Include the Control No. 1902-0075 in any correspondence.

Electronic Filing (eFiling)

To electronically file your Form 556, visit the Commission's QF website at www.ferc.gov/QF and click the eFiling link.

If you are eFiling your first document, you will need to register with your name, email address, mailing address, and phone number. If you are registering on behalf of an employer, then you will also need to provide the employer name, alternate contact name, alternate contact phone number and and alternate contact email.

Once you are registered, log in to eFiling with your registered email address and the password that you created at registration. Follow the instructions. When prompted, select one of the following QF-related filing types, as appropriate, from the Electric or General filing category.

Filing category	Filing Type as listed in eFiling	Description
Electric	(Fee) Application for Commission Cert. as Cogeneration QF	Use to submit an application for Commission certification or Commission recertification of a cogeneration facility as a QF.
	(Fee) Application for Commission Cert. as Small Power QF	Use to submit an application for Commission certification or Commission recertification of a small power production facility as a QF.
	Self-Certification Notice (QF, EG, FC)	Use to submit a notice of self-certification of your facility (cogeneration or small power production) as a QF.
	Self-Recertification of Qualifying Facility (QF)	Use to submit a notice of self-recertification of your facility (cogeneration or small power production) as a QF.
	Supplemental Information or Request	Use to correct or supplement a Form 556 that was submitted with errors or omissions, or for which Commission staff has requested additional information. Do *not* use this filing type to report new changes to a facility or its ownership; rather, use a self-recertification or Commission recertification to report such changes.
General	(Fee) Petition for Declaratory Order (not under FPA Part 1)	Use to submit a petition for declaratory order granting a waiver of Commission QF regulations pursuant to 18 C.F.R. §§ 292.204(a)(3) and/or 292.205(c). A Form 556 is not required for a petition for declaratory order unless Commission recertification is being requested as part of the petition.

You will be prompted to submit your filing fee, if applicable, during the electronic submission process. Filing fees can be paid via electronic bank account debit or credit card.

During the eFiling process, you will be prompted to select your file(s) for upload from your computer.

Filing Fee

No filing fee is required if you are submitting a self-certification or self-recertification of your facility as a QF pursuant to 18 C.F.R. § 292.207(a).

A filing fee is required if you are filing either of the following:

(1) an application for Commission certification or recertification of your facility as a QF pursuant to 18 C.F.R. § 292.207(b), or
(2) a petition for declaratory order granting waiver pursuant to 18 C.F.R. §§ 292.204(a)(3) and/or 292.205(c).

The current fees for applications for Commission certifications and petitions for declaratory order can be found by visiting the Commission's QF website at www.ferc.gov/QF and clicking the Fee Schedule link.

You will be prompted to submit your filing fee, if applicable, during the electronic filing process described on page 2.

Required Notice to Utilities and State Regulatory Authorities

Pursuant to 18 C.F.R. § 292.207(a)(ii), you must provide a copy of your self-certification or request for Commission certification to the utilities with which the facility will interconnect and/or transact, as well as to the State regulatory authorities of the states in which your facility and those utilities reside. Links to information about the regulatory authorities in various states can be found by visiting the Commission's QF website at www.ferc.gov/QF and clicking the Notice Requirements link.

What to Expect From the Commission After You File

An applicant filing a Form 556 electronically will receive an email message acknowledging receipt of the filing and showing the docket number assigned to the filing. Such email is typically sent within one business day, but may be delayed pending confirmation by the Secretary of the Commission of the contents of the filing.

An applicant submitting a self-certification of QF status should expect to receive no documents from the Commission, other than the electronic acknowledgement of receipt described above. Consistent with its name, a self-certification is a certification *by the applicant itself* that the facility meets the relevant requirements for QF status, and does not involve a determination by the Commission as to the status of the facility. An acknowledgement of receipt of a self-certification, in particular, does not represent a determination by the Commission with regard to the QF status of the facility. An applicant self-certifying may, however, receive a rejection, revocation or deficiency letter if its application is found, during periodic compliance reviews, not to comply with the relevant requirements.

An applicant submitting a request for Commission certification will receive an order either granting or denying certification of QF status, or a letter requesting additional information or rejecting the application. Pursuant to 18 C.F.R. § 292.207(b)(3), the Commission must act on an application for Commission certification within 90 days of the later of the filing date of the application or the filing date of a supplement, amendment or other change to the application.

Waiver Requests

18 C.F.R. § 292.204(a)(3) allows an applicant to request a waiver to modify the method of calculation pursuant to 18 C.F.R. § 292.204(a)(2) to determine if two facilities are considered to be located at the same site, for good cause. 18 C.F.R. § 292.205(c) allows an applicant to request waiver of the requirements of 18 C.F.R. §§ 292.205(a) and (b) for operating and efficiency upon a showing that the facility will produce significant energy savings. A request for waiver of these requirements must be submitted as a petition for declaratory order, with the appropriate filing fee for a petition for declaratory order. Applicants requesting Commission recertification as part of a request for waiver of one of these requirements should electronically submit their completed Form 556 along with their petition for declaratory order, rather than filing their Form 556 as a separate request for Commission recertification. Only the filing fee for the petition for declaratory order must be paid to cover both the waiver request and the request for recertification *if such requests are made simultaneously.*

18 C.F.R. § 292.203(d)(2) allows an applicant to request a waiver of the Form 556 filing requirements, for good cause. Applicants filing a petition for declaratory order requesting a waiver under 18 C.F.R. § 292.203(d)(2) do not need to complete or submit a Form 556 with their petition.

Geographic Coordinates

If a street address does not exist for your facility, then line 3c of the Form 556 requires you to report your facility's geographic coordinates (latitude and longitude). Geographic coordinates may be obtained from several different sources. You can find links to online services that show latitude and longitude coordinates on online maps by visiting the Commission's QF webpage at www.ferc.gov/QF and clicking the Geographic Coordinates link. You may also be able to obtain your geographic coordinates from a GPS device, Google Earth (available free at http://earth.google.com), a property survey, various engineering or construction drawings, a property deed, or a municipal or county map showing property lines.

Filing Privileged Data or Critical Energy Infrastructure Information in a Form 556

The Commission's regulations provide procedures for applicants to either (1) request that any information submitted with a Form 556 be given privileged treatment because the information is exempt from the mandatory public disclosure requirements of the Freedom of Information Act, 5 U.S.C. § 552, and should be withheld from public disclosure; or (2) identify any documents containing critical energy infrastructure information (CEII) as defined in 18 C.F.R. § 388.113 that should not be made public.

If you are seeking privileged treatment or CEII status for any data in your Form 556, then you must follow the procedures in 18 C.F.R. § 388.112. See www.ferc.gov/help/filing-guide/file-ceii.asp for more information.

Among other things (see 18 C.F.R. § 388.112 for other requirements), applicants seeking privileged treatment or CEII status for data submitted in a Form 556 must prepare and file both (1) a complete version of the Form 556 (containing the privileged and/or CEII data), and (2) a public version of the Form 556 (with the privileged and/or CEII data redacted). Applicants preparing and filing these different versions of their Form 556 must indicate below the security designation of this version of their document. If you are *not* seeking privileged treatment or CEII status for any of your Form 556 data, then you should not respond to any of the items on this page.

☐ **Non-Public**: Applicant is seeking privileged treatment and/or CEII status for data contained in the Form 556 lines indicated below. This non-public version of the applicant's Form 556 contains all data, including the data that is redacted in the (separate) public version of the applicant's Form 556.
☐ **Public (redacted)**: Applicant is seeking privileged treatment and/or CEII status for data contained in the Form 556 lines indicated below. This public version of the applicants's Form 556 contains all data except for data from the lines indicated below, which has been redacted.
Privileged: Indicate below which lines of your form contain data for which you are seeking privileged treatment
Critical Energy Infrastructure Information (CEII): Indicate below which lines of your form contain data for which you are seeking CEII status

The eFiling process described on page 2 will allow you to identify which versions of the electronic documents you submit are public, privileged and/or CEII. The filenames for such documents should begin with "Public", "Priv", or "CEII", as applicable, to clearly indicate the security designation of the file. Both versions of the Form 556 should be unaltered PDF copies of the Form 556, as available for download from www.ferc.gov/QF. To redact data from the public copy of the submittal, simply omit the relevant data from the Form. For numerical fields, leave the redacted fields blank. For text fields, complete as much of the field as possible, and replace the redacted portions of the field with the word "REDACTED" in brackets. Be sure to identify above all fields which contain data for which you are seeking non-public status.

The Commission is not responsible for detecting or correcting filer errors, including those errors related to security designation. If your documents contain sensitive information, make sure they are filed using the proper security designation.

FEDERAL ENERGY REGULATORY COMMISSION
WASHINGTON, DC

OMB Control # 1902-0075
Expiration 5/31/2013

Form 556 Certification of Qualifying Facility (QF) Status for a Small Power Production or Cogeneration Facility

Application Information

1a Full name of applicant (legal entity on whose behalf qualifying facility status is sought for this facility)
Buckeye Florida, Limited Partnership

1b Applicant street address
One Buckeye Drive

1c City
Perry

1d State/province
FL

1e Postal code
32348

1f Country (if not United States)

1g Telephone number
850 584 1240

1h Has the instant facility ever previously been certified as a QF? Yes ☐ No ☒

1i If yes, provide the docket number of the last known QF filing pertaining to this facility: QF ___ - ___ - ___

1j Under which certification process is the applicant making this filing?

☒ Notice of self-certification (see note below)

☐ Application for Commission certification (requires filing fee; see "Filing Fee" section on page 3)

Note: a notice of self-certification is a notice by the applicant itself that its facility complies with the requirements for QF status. A notice of self-certification does not establish a proceeding, and the Commission does not review a notice of self-certification to verify compliance. See the "What to Expect From the Commission After You File" section on page 3 for more information.

1k What type(s) of QF status is the applicant seeking for its facility? (check all that apply)

☐ Qualifying small power production facility status ☒ Qualifying cogeneration facility status

1l What is the purpose and expected effective date(s) of this filing?

☒ Original certification; facility expected to be installed by 11/1/10 and to begin operation on 11/1/10

☐ Change(s) to a previously certified facility to be effective on ___
(identify type(s) of change(s) below, and describe change(s) in the Miscellaneous section starting on page 19)

- ☐ Name change and/or other administrative change(s)
- ☐ Change in ownership
- ☐ Change(s) affecting plant equipment, fuel use, power production capacity and/or cogeneration thermal output

☐ Supplement or correction to a previous filing submitted on ___
(describe the supplement or correction in the Miscellaneous section starting on page 19)

1m If any of the following three statements is true, check the box(es) that describe your situation and complete the form to the extent possible, explaining any special circumstances in the Miscellaneous section starting on page 19.

☐ The instant facility complies with the Commission's QF requirements by virtue of a waiver of certain regulations previously granted by the Commission in an order dated ___ (specify any other relevant waiver orders in the Miscellaneous section starting on page 19)

☐ The instant facility would comply with the Commission's QF requirements if a petition for waiver submitted concurrently with this application is granted

☐ The instant facility complies with the Commission's regulations, but has special circumstances, such as the employment of unique or innovative technologies not contemplated by the structure of this form, that make the demonstration of compliance via this form difficult or impossible (describe in Misc. section starting on p. 19)

Contact Information

2a Name of contact person
BEN Crowe

2b Telephone number
850 584 1829

2c Which of the following describes the contact person's relationship to the applicant? (check one)

- ☐ Applicant (self)
- ☐ Employee, owner or partner of applicant authorized to represent the applicant
- ☒ Employee of a company affiliated with the applicant authorized to represent the applicant on this matter
- ☐ Lawyer, consultant, or other representative authorized to represent the applicant on this matter

2d Company or organization name (if applicant is an individual, check here and skip to line 2e) ☐
Buckeye Florida Limited Partnership

2e Street address (if same as Applicant, check here and skip to line 3a) ☐
One Buckeye Drive

2f City
Perry

2g State/province
Florida

2h Postal code
32348

2i Country (if not United States)

Facility Identification and Location

3a Facility name
Buckeye Florida Limited Partnership

3b Street address (if a street address does not exist for the facility, check here and skip to line 3c) ☐
One Buckeye Drive,

3c Geographic coordinates: If you indicated that no street address exists for your facility by checking the box in line 3b, then you must specify the latitude and longitude coordinates of the facility in degrees (to three decimal places). Use the following formula to convert to decimal degrees from degrees, minutes and seconds: decimal degrees = degrees + (minutes/60) + (seconds/3600). See the "Geographic Coordinates" section on page 4 for help. If you provided a street address for your facility in line 3b, then specifying the geographic coordinates below is optional.

Longitude ☐ East (+) ☐ West (-) _____ degrees

Latitude ☐ North (+) ☐ South (-) _____ degrees

3d City (if unincorporated, check here and enter nearest city) ☐
Perry

3e State/province
Florida

3f County (or check here for independent city) ☐
Taylor County, Florida

3g Country (if not United States)

Transacting Utilities

Identify the electric utilities that are contemplated to transact with the facility.

4a Identify utility interconnecting with the facility
Progress Energy Florida, Inc

4b Identify utilities providing wheeling service or check here if none ☒

4c Identify utilities purchasing the useful electric power output or check here if none ☐
Progress Energy Florida, Inc

4d Identify utilities providing supplementary power, backup power, maintenance power, and/or interruptible power service or check here if none ☐
Progress Energy Florida, Inc

Ownership and Operation

5a Direct ownership as of effective date or operation date: Identify all direct owners of the facility holding at least 10 percent equity interest. For each identified owner, also (1) indicate whether that owner is an electric utility, as defined in section 3(22) of the Federal Power Act (16 U.S.C. 796(22)), or a holding company, as defined in section 1262(8) of the Public Utility Holding Company Act of 2005 (42 U.S.C. 16451(8)), and (2) for owners which are electric utilities or holding companies, provide the percentage of equity interest in the facility held by that owner. If no direct owners hold at least 10 percent equity interest in the facility, then provide the required information for the two direct owners with the largest equity interest in the facility.

	Full legal names of direct owners	Electric utility or holding company	If Yes, % equity interest
1)	Buckeye Technologies, Inc	Yes ☐ No ☒	100 %
2)		Yes ☐ No ☐	%
3)		Yes ☐ No ☐	%
4)		Yes ☐ No ☐	%
5)		Yes ☐ No ☐	%
6)		Yes ☐ No ☐	%
7)		Yes ☐ No ☐	%
8)		Yes ☐ No ☐	%
9)		Yes ☐ No ☐	%
10)		Yes ☐ No ☐	%

☐ Check here and continue in the Miscellaneous section starting on page 19 if additional space is needed

5b Upstream (i.e., indirect) ownership as of effective date or operation date: Identify all upstream (i.e., indirect) owners of the facility that both (1) hold at least 10 percent equity interest in the facility, and (2) are electric utilities, as defined in section 3(22) of the Federal Power Act (16 U.S.C. 796(22)), or holding companies, as defined in section 1262(8) of the Public Utility Holding Company Act of 2005 (42 U.S.C. 16451(8)). Also provide the percentage of equity interest in the facility held by such owners. (Note that, because upstream owners may be subsidiaries of one another, total percent equity interest reported may exceed 100 percent.)

Check here if no such upstream owners exist. ☒

	Full legal names of electric utility or holding company upstream owners	% equity interest
1)		%
2)		%
3)		%
4)		%
5)		%
6)		%
7)		%
8)		%
9)		%
10)		%

☐ Check here and continue in the Miscellaneous section starting on page 19 if additional space is needed

5c Identify the facility operator

Buckeye Florida Limited Partnership

Energy Input

6a Describe the primary energy input: (check one main category and, if applicable, one subcategory)

- ☒ Biomass (specify)
  - ☐ Landfill gas
  - ☐ Manure digester gas
  - ☐ Municipal solid waste
  - ☐ Sewage digester gas
  - ☐ Wood
  - ☒ Other biomass (describe on page 19)
- ☐ Waste (specify type below in line 6b)
- ☐ Renewable resources (specify)
  - ☐ Hydro power - river
  - ☐ Hydro power - tidal
  - ☐ Hydro power - wave
  - ☐ Solar - photovoltaic
  - ☐ Solar - thermal
  - ☐ Wind
  - ☐ Other renewable resource (describe on page 19)
- ☐ Geothermal
- ☐ Fossil fuel (specify)
  - ☐ Coal (not waste)
  - ☐ Fuel oil/diesel
  - ☐ Natural gas (not waste)
  - ☐ Other fossil fuel (describe on page 19)
- ☐ Other (describe on page 19)

6b If you specified "waste" as the primary energy input in line 6a, indicate the type of waste fuel used: (check one)

☐ Waste fuel listed in 18 C.F.R. § 292.202(b) (specify one of the following)

- ☐ Anthracite culm produced prior to July 23, 1985
- ☐ Anthracite refuse that has an average heat content of 6,000 Btu or less per pound and has an average ash content of 45 percent or more
- ☐ Bituminous coal refuse that has an average heat content of 9,500 Btu per pound or less and has an average ash content of 25 percent or more
- ☐ Top or bottom subbituminous coal produced on Federal lands or on Indian lands that has been determined to be waste by the United States Department of the Interior's Bureau of Land Management (BLM) or that is located on non-Federal or non-Indian lands outside of BLM's jurisdiction, provided that the applicant shows that the latter coal is an extension of that determined by BLM to be waste
- ☐ Coal refuse produced on Federal lands or on Indian lands that has been determined to be waste by the BLM or that is located on non- Federal or non-Indian lands outside of BLM's jurisdiction, provided that applicant shows that the latter is an extension of that determined by BLM to be waste
- ☐ Lignite produced in association with the production of montan wax and lignite that becomes exposed as a result of such a mining operation
- ☐ Gaseous fuels (except natural gas and synthetic gas from coal) (describe on page 19)
- ☐ Waste natural gas from gas or oil wells (describe on page 19 how the gas meets the requirements of 18 C.F.R. § 2.400 for waste natural gas; include with your filing any materials necessary to demonstrate compliance with 18 C.F.R. § 2.400)
- ☐ Materials that a government agency has certified for disposal by combustion (describe on page 19)
- ☐ Heat from exothermic reactions (describe on page 19) ☐ Residual heat (describe on page 19)
- ☐ Used rubber tires ☐ Plastic materials ☐ Refinery off-gas ☐ Petroleum coke

☐ Other waste energy input that has little or no commercial value and exists in the absence of the qualifying facility industry (describe in the Miscellaneous section starting on page 19; include a discussion of the fuel's lack of commercial value and existence in the absence of the qualifying facility industry)

6c Provide the average energy input, calculated on a calendar year basis, in terms of Btu/h for the following fossil fuel energy inputs, and provide the related percentage of the total average annual energy input to the facility (18 C.F.R. § 292.202(j)). For any oil or natural gas fuel, use lower heating value (18 C.F.R. § 292.202(m)).

Fuel	Annual average energy input for specified fuel	Percentage of total annual energy input
Natural gas	199,210,845 Btu/h	10 %
Oil-based fuels	26,428,117 Btu/h	1.3 %
Coal	0 Btu/h	0 %

Technical Facility Information

Indicate the maximum gross and maximum net electric power production capacity of the facility at the point(s) of delivery by completing the worksheet below. Respond to all items. If any of the parasitic loads and/or losses identified in lines 7b through 7e are negligible, enter zero for those lines.

7a The maximum gross power production capacity at the terminals of the individual generator(s) under the most favorable anticipated design conditions	60,200 kW
7b Parasitic station power used at the facility to run equipment which is necessary and integral to the power production process (boiler feed pumps, fans/blowers, office or maintenance buildings directly related to the operation of the power generating facility, etc.). If this facility includes non-power production processes (for instance, power consumed by a cogeneration facility's thermal host), do not include any power consumed by the non-power production activities in your reported parasitic station power.	11,360 kW
7c Electrical losses in interconnection transformers	0 kW
7d Electrical losses in AC/DC conversion equipment, if any	0 kW
7e Other interconnection losses in power lines or facilities (other than transformers and AC/DC conversion equipment) between the terminals of the generator(s) and the point of interconnection with the utility	0 kW
7f Total deductions from gross power production capacity = 7b + 7c + 7d + 7e	11,360.0 kW
7g Maximum net power production capacity = 7a - 7f	48,840.0 kW

7h Description of facility and primary components: Describe the facility and its operation. Identify all boilers, heat recovery steam generators, prime movers (any mechanical equipment driving an electric generator), electrical generators, photovoltaic solar equipment, fuel cell equipment and/or other primary power generation equipment used in the facility. Descriptions of components should include (as applicable) specifications of the nominal capacities for mechanical output, electrical output, or steam generation of the identified equipment. For each piece of equipment identified, clearly indicate how many pieces of that type of equipment are included in the plant, and which components are normally operating or normally in standby mode. Provide a description of how the components operate as a system. Applicants for cogeneration facilities do not need to describe operations of systems that are clearly depicted on and easily understandable from a cogeneration facility's attached mass and heat balance diagram; however, such applicants should provide any necessary description needed to understand the sequential operation of the facility depicted in their mass and heat balance diagram. If additional space is needed, continue in the Miscellaneous section starting on page 19.

This facility is a kraft pulp mill with internal power production capability. The steam and power plant are described as follows: A 600lb Steam header is supplied with 750 F steam from 3 Recovery Boilers (955 kpph steam), 2 Bark Boilers (550 kpph steam), 1 Natural Gas Boiler (190 kpph steam), and 1 #6 Fuel Oil/Natural Gas Boiler (190 kpph steam). The 600 lb header supplies 5 steam turbine generators. Two turbine generators with a 150lb header extraction and 50lb header exhaust for a peak capacity of 19.5 MW. One turbine generator with a 50lb header exhaust for a peak capacity of 13.0 MW. One turbine generator with a 150lb header exhaust for a peak capacity of 10.7 MW. One Condensing turbine generator with a peak capacity of 15.0 MW. 600lb and 150lb steam is used to drive mechanical steam turbines for Boiler Feedwater pumps and Boiler Fans. 150lb header also supplies steam to boiler feedwater heaters. 50lb header supplies steam to feedwater deaerator and 4 sets of Black Liquor Evaporators/ Concentrators. Black Liquor Evaporators/Concentrators evaporate water from spent pulping liquor, concentrating the liquor from 16% solids to 68% solids. Black liquor is the primary fuel source for Recovery Boilers. There is also a 10lb steam header that collects waste steam and preheats boiler feedwater prior to deaeration. Boiler water is supplied from a demineralized water plant consisting of cation and anion treatment units.

Information Required for Small Power Production Facility

If you indicated in line 1k that you are seeking qualifying small power production facility status for your facility, then you must respond to the items on this page. Otherwise, skip page 10.

Certification of Compliance with Size Limitations

Pursuant to 18 C.F.R. § 292.204(a), the power production capacity of any small power production facility, together with the power production capacity of any other small power production facilities that use the same energy resource, are owned by the same person(s) or its affiliates, and are located at the same site, may not exceed 80 megawatts. To demonstrate compliance with this size limitation, or to demonstrate that your facility is exempt from this size limitation under the Solar, Wind, Waste, and Geothermal Power Production Incentives Act of 1990 (Pub. L. 101-575, 104 Stat. 2834 (1990) *as amended by* Pub. L. 102-46, 105 Stat. 249 (1991)), respond to lines 8a through 8e below (as applicable).

8a Identify any facilities with electrical generating equipment located within 1 mile of the electrical generating equipment of the instant facility, and for which any of the entities identified in lines 5a or 5b, or their affiliates, holds at least a 5 percent equity interest.

Check here if no such facilities exist. ☐

	Facility location (city or county, state)	Root docket # (if any)	Common owner(s)	Maximum net power production capacity
1)		QF -		kW
2)		QF -		kW
3)		QF -		kW

☐ Check here and continue in the Miscellaneous section starting on page 19 if additional space is needed

8b The Solar, Wind, Waste, and Geothermal Power Production Incentives Act of 1990 (Incentives Act) provides exemption from the size limitations in 18 C.F.R. § 292.204(a) for certain facilities that were certified prior to 1995. Are you seeking exemption from the size limitations in 18 C.F.R. § 292.204(a) by virtue of the Incentives Act?

☐ Yes (continue at line 8c below) ☐ No (skip lines 8c through 8e)

8c Was the original notice of self-certification or application for Commission certification of the facility filed on or before December 31, 1994? Yes ☐ No ☐

8d Did construction of the facility commence on or before December 31, 1999? Yes ☐ No ☐

8e If you answered No in line 8d, indicate whether reasonable diligence was exercised toward the completion of the facility, taking into account all factors relevant to construction? Yes ☐ No ☐ If you answered Yes, provide a brief narrative explanation in the Miscellaneous section starting on page 19 of the construction timeline (in particular, describe why construction started so long after the facility was certified) and the diligence exercised toward completion of the facility.

Certification of Compliance with Fuel Use Requirements

Pursuant to 18 C.F.R. § 292.204(b), qualifying small power production facilities may use fossil fuels, in minimal amounts, for only the following purposes: ignition; start-up; testing; flame stabilization; control use; alleviation or prevention of unanticipated equipment outages; and alleviation or prevention of emergencies, directly affecting the public health, safety, or welfare, which would result from electric power outages. The amount of fossil fuels used for these purposes may not exceed 25 percent of the total energy input of the facility during the 12-month period beginning with the date the facility first produces electric energy or any calendar year thereafter.

9a Certification of compliance with 18 C.F.R. § 292.204(b) with respect to uses of fossil fuel:

☐ Applicant certifies that the facility will use fossil fuels *exclusively* for the purposes listed above.

9b Certification of compliance with 18 C.F.R. § 292.204(b) with respect to amount of fossil fuel used annually:

☐ Applicant certifies that the amount of fossil fuel used at the facility will not, in aggregate, exceed 25 percent of the total energy input of the facility during the 12-month period beginning with the date the facility first produces electric energy or any calendar year thereafter.

Information Required for Cogeneration Facility

If you indicated in line 1k that you are seeking qualifying cogeneration facility status for your facility, then you must respond to the items on pages 11 through 13. Otherwise, skip pages 11 through 13.

General Cogeneration Information

Pursuant to 18 C.F.R. § 292.202(c), a cogeneration facility produces electric energy and forms of useful thermal energy (such as heat or steam) used for industrial, commercial, heating, or cooling purposes, through the sequential use of energy. Pursuant to 18 C.F.R. § 292.202(s), "sequential use" of energy means the following: (1) for a topping-cycle cogeneration facility, the use of reject heat from a power production process in sufficient amounts in a thermal application or process to conform to the requirements of the operating standard contained in 18 C.F.R. § 292.205(a); or (2) for a bottoming-cycle cogeneration facility, the use of at least some reject heat from a thermal application or process for power production.

10a What type(s) of cogeneration technology does the facility represent? (check all that apply)

☒ Topping-cycle cogeneration ☐ Bottoming-cycle cogeneration

10b To help demonstrate the sequential operation of the cogeneration process, and to support compliance with other requirements such as the operating and efficiency standards, include with your filing a mass and heat balance diagram depicting average annual operating conditions. This diagram must include certain items and meet certain requirements, as described below. You must check next to the description of each requirement below to certify that you have complied with these requirements.

Check to certify compliance with indicated requirement	Requirement
☒	Diagram must show orientation within system piping and/or ducts of all prime movers, heat recovery steam generators, boilers, electric generators, and condensers (as applicable), as well as any other primary equipment relevant to the cogeneration process.
☒	Any average annual values required to be reported in lines 10b, 12a, 13a, 13b, 13d, 13f, 14a, 15b, 15d and/or 15f must be computed over the anticipated hours of operation.
☒	Diagram must specify all fuel inputs by fuel type and average annual rate in Btu/h. Fuel for supplementary firing should be specified separately and clearly labeled. All specifications of fuel inputs should use lower heating values.
☒	Diagram must specify average gross electric output in kW or MW for each generator.
☒	Diagram must specify average mechanical output (that is, any mechanical energy taken off of the shaft of the prime movers for purposes not directly related to electric power generation) in horsepower, if any. Typically, a cogeneration facility has no mechanical output.
☒	At each point for which working fluid flow conditions are required to be specified (see below), such flow condition data must include mass flow rate (in lb/h or kg/s), temperature (in °F, R, °C or K), absolute pressure (in psia or kPa) and enthalpy (in Btu/lb or kJ/kg). Exception: For systems where the working fluid is *liquid only* (no vapor at any point in the cycle) and where the type of liquid and specific heat of that liquid are clearly indicated on the diagram or in the Miscellaneous section starting on page 19, only mass flow rate and temperature (not pressure and enthalpy) need be specified. For reference, specific heat at standard conditions for pure liquid water is approximately 1.002 Btu/(lb*R) or 4.195 kJ/(kg*K).
☒	Diagram must specify working fluid flow conditions at input to and output from each steam turbine or other expansion turbine or back-pressure turbine.
☒	Diagram must specify working fluid flow conditions at delivery to and return from each thermal application.
☒	Diagram must specify working fluid flow conditions at make-up water inputs.

EPAct 2005 Requirements for Fundamental Use of Energy Output from Cogeneration Facilities

EPAct 2005 cogeneration facilities: The Energy Policy Act of 2005 (EPAct 2005) established a new section 210(n) of the Public Utility Regulatory Policies Act of 1978 (PURPA), 16 USC 824a-3(n), with additional requirements for any qualifying cogeneration facility that (1) is seeking to sell electric energy pursuant to section 210 of PURPA and (2) was either not a cogeneration facility on August 8, 2005, or had not filed a self-certification or application for Commission certification of QF status on or before February 1, 2006. These requirements were implemented by the Commission in 18 C.F.R. § 292.205(d). Complete the lines below, carefully following the instructions, to demonstrate whether these additional requirements apply to your cogeneration facility and, if so, whether your facility complies with such requirements.

11a Was your facility operating as a qualifying cogeneration facility on or before August 8, 2005? Yes ☐ No ☒

11b Was the initial filing seeking certification of your facility (whether a notice of self-certification or an application for Commission certification) filed on or before February 1, 2006? Yes ☐ No ☒

If the answer to either line 11a or 11b is Yes, then continue at line 11c below. Otherwise, if the answers to both lines 11a and 11b are No, skip to line 11e below.

11c With respect to the design and operation of the facility, have any changes been implemented on or after February 2, 2006 that affect general plant operation, affect use of thermal output, and/or increase net power production capacity from the plant's capacity on February 1, 2006?

☐ Yes (continue at line 11d below)

☐ No. Your facility is not subject to the requirements of 18 C.F.R. § 292.205(d) at this time. However, it may be subject to to these requirements in the future if changes are made to the facility. At such time, the applicant would need to recertify the facility to determine eligibility. Skip lines 11d through 11j.

11d Does the applicant contend that the changes identified in line 11c are not so significant as to make the facility a "new" cogeneration facility that would be subject to the 18 C.F.R. § 292.205(d) cogeneration requirements?

☐ Yes. Provide in the Miscellaneous section starting on page 19 a description of any relevant changes made to the facility (including the purpose of the changes) and a discussion of why the facility should not be considered a "new" cogeneration facility in light of these changes. Skip lines 11e through 11j.

☐ No. Applicant stipulates to the fact that it is a "new" cogeneration facility (for purposes of determining the applicability of the requirements of 18 C.F.R. § 292.205(d)) by virtue of modifications to the facility that were initiated on or after February 2, 2006. Continue below at line 11e.

11e Will electric energy from the facility be sold pursuant to section 210 of PURPA?

☒ Yes. The facility is an EPAct 2005 cogeneration facility. You must demonstrate compliance with 18 C.F.R. § 292.205(d)(2) by continuing at line 11f below.

☐ No. Applicant certifies that energy will *not* be sold pursuant to section 210 of PURPA. Applicant also certifies its understanding that it must recertify its facility in order to determine compliance with the requirements of 18 C.F.R. § 292.205(d) *before* selling energy pursuant to section 210 of PURPA in the future. Skip lines 11f through 11j.

11f Is the net power production capacity of your cogeneration facility, as indicated in line 7g above, less than or equal to 5,000 kW?

☐ Yes, the net power production capacity is less than or equal to 5,000 kW. 18 C.F.R. § 292.205(d)(4) provides a rebuttable presumption that cogeneration facilities of 5,000 kW and smaller capacity comply with the requirements for fundamental use of the facility's energy output in 18 C.F.R. § 292.205(d)(2). Applicant certifies its understanding that, should the power production capacity of the facility increase above 5,000 kW, then the facility must be recertified to (among other things) demonstrate compliance with 18 C.F.R. § 292.205(d)(2). Skip lines 11g through 11j.

☒ No, the net power production capacity is greater than 5,000 kW. Demonstrate compliance with the requirements for fundamental use of the facility's energy output in 18 C.F.R. § 292.205(d)(2) by continuing on the next page at line 11g.

EPAct 2005 Requirements for Fundamental Use of Energy Output from Cogeneration Facilities (continued)

Lines 11g through 11k below guide the applicant through the process of demonstrating compliance with the requirements for "fundamental use" of the facility's energy output. 18 C.F.R. § 292.205(d)(2). Only respond to the lines on this page if the instructions on the previous page direct you to do so. Otherwise, skip this page.

18 C.F.R. § 292.205(d)(2) requires that the electrical, thermal, chemical and mechanical output of an EPAct 2005 cogeneration facility is used fundamentally for industrial, commercial, residential or institutional purposes and is not intended fundamentally for sale to an electric utility, taking into account technological, efficiency, economic, and variable thermal energy requirements, as well as state laws applicable to sales of electric energy from a qualifying facility to its host facility. If you were directed on the previous page to respond to the items on this page, then your facility is an EPAct 2005 cogeneration facility that is subject to this "fundamental use" requirement.

The Commission's regulations provide a two-pronged approach to demonstrating compliance with the requirements for fundamental use of the facility's energy output. First, the Commission has established in 18 C.F.R. § 292.205(d)(3) a "fundamental use test" that can be used to demonstrate compliance with 18 C.F.R. § 292.205(d)(2). Under the fundamental use test, a facility is considered to comply with 18 C.F.R. § 292.205(d)(2) if at least 50 percent of the facility's total annual energy output (including electrical, thermal, chemical and mechanical energy output) is used for industrial, commercial, residential or institutional purposes.

Second, an applicant for a facility that does not pass the fundamental use test may provide a narrative explanation of and support for its contention that the facility nonetheless meets the requirement that the electrical, thermal, chemical and mechanical output of an EPAct 2005 cogeneration facility is used fundamentally for industrial, commercial, residential or institutional purposes and is not intended fundamentally for sale to an electric utility, taking into account technological, efficiency, economic, and variable thermal energy requirements, as well as state laws applicable to sales of electric energy from a qualifying facility to its host facility.

Complete lines 11g through 11j below to determine compliance with the fundamental use test in 18 C.F.R. § 292.205(d)(3). Complete lines 11g through 11j *even if you do not intend to rely upon the fundamental use test to demonstrate compliance with 18 C.F.R. § 292.205(d)(2).*

11g Amount of electrical, thermal, chemical and mechanical energy output (net of internal generation plant losses and parasitic loads) expected to be used annually for industrial, commercial, residential or institutional purposes and not sold to an electric utility	453,505 MWh
11h Total amount of electrical, thermal, chemical and mechanical energy expected to be sold to an electric utility	13,753 MWh
11i Percentage of total annual energy output expected to be used for industrial, commercial, residential or institutional purposes and not sold to a utility = 100 * 11g /(11g + 11h)	97.1 %

11j Is the response in line 11i greater than or equal to 50 percent?

☒ Yes. Your facility complies with 18 C.F.R. § 292.205(d)(2) by virtue of passing the fundamental use test provided in 18 C.F.R. § 292.205(d)(3). Applicant certifies its understanding that, if it is to rely upon passing the fundamental use test as a basis for complying with 18 C.F.R. § 292.205(d)(2), then the facility must comply with the fundamental use test both in the 12-month period beginning with the date the facility first produces electric energy, and in all subsequent calendar years.

☐ No. Your facility does not pass the fundamental use test. Instead, you must provide in the Miscellaneous section starting on page 19 a narrative explanation of and support for why your facility meets the requirement that the electrical, thermal, chemical and mechanical output of an EPAct 2005 cogeneration facility is used fundamentally for industrial, commercial, residential or institutional purposes and is not intended fundamentally for sale to an electric utility, taking into account technological, efficiency, economic, and variable thermal energy requirements, as well as state laws applicable to sales of electric energy from a QF to its host facility. Applicants providing a narrative explanation of why their facility should be found to comply with 18 C.F.R. § 292.205(d)(2) in spite of non-compliance with the fundamental use test may want to review paragraphs 47 through 61 of Order No. 671 (accessible from the Commission's QF website at www.ferc.gov/QF), which provide discussion of the facts and circumstances that may support their explanation. Applicant should also note that the percentage reported above will establish the standard that that facility must comply with, both for the 12-month period beginning with the date the facility first produces electric energy, and in all subsequent calendar years. *See* Order No. 671 at paragraph 51. As such, the applicant should make sure that it reports appropriate values on lines 11g and 11h above to serve as the relevant annual standard, taking into account expected variations in production conditions.

Information Required for Topping-Cycle Cogeneration Facility

If you indicated in line 10a that your facility represents topping-cycle cogeneration technology, then you must respond to the items on pages 14 and 15. Otherwise, skip pages 14 and 15.

Usefulness of Topping-Cycle Thermal Output

The thermal energy output of a topping-cycle cogeneration facility is the net energy made available to an industrial or commercial process or used in a heating or cooling application. Pursuant to sections 292.202(c), (d) and (h) of the Commission's regulations (18 C.F.R. §§ 292.202(c), (d) and (h)), the thermal energy output of a qualifying topping-cycle cogeneration facility must be useful. In connection with this requirement, describe the thermal output of the topping-cycle cogeneration facility by responding to lines 12a and 12b below.

12a Identify and describe each thermal host, and specify the annual average rate of thermal output made available to each host for each use. For hosts with multiple uses of thermal output, provide the data for each use *in separate rows.*

	Name of entity (thermal host) taking thermal output	Thermal host's relationship to facility; Thermal host's use of thermal output	Average annual rate of thermal output attributable to use (net of heat contained in process return or make-up water)
1)	Buckeye 150 PSIG Users	Applicant or affiliate Industrial process - chemical (not petroleum)	438,410 Btu/h
2)	Buckeye 50 PSIG Users	Applicant or affiliate Industrial process - chemical (not petroleum)	841,776 Btu/h
3)		Select thermal host's relationship to facility Select thermal host's use of thermal output	Btu/h
4)		Select thermal host's relationship to facility Select thermal host's use of thermal output	Btu/h
5)		Select thermal host's relationship to facility Select thermal host's use of thermal output	Btu/h
6)		Select thermal host's relationship to facility Select thermal host's use of thermal output	Btu/h

☐ Check here and continue in the Miscellaneous section starting on page 19 if additional space is needed

12b Demonstration of usefulness of thermal output: At a minimum, provide a brief description of each use of the thermal output identified above. In some cases, this brief description is sufficient to demonstrate usefulness. However, if your facility's use of thermal output is not common, and/or if the usefulness of such thermal output is not reasonably clear, then you must provide additional details as necessary to demonstrate usefulness. Your application may be rejected and/or additional information may be required if an insufficient showing of usefulness is made. (Exception: If you have previously received a Commission certification approving a specific use of thermal output related to the instant facility, then you need only provide a brief description of that use and a reference by date and docket number to the order certifying your facility with the indicated use. Such exemption may not be used if any change creates a material deviation from the previously authorized use.) If additional space is needed, continue in the Miscellaneous section starting on page 19.

Buckeye utilizes thermal output, in the form of steam, throughout its cellulose fiber production process. Steam from items 12.a.1 (150 PSIG steam) and 12.a.2 (50 PSIG steam) above are products of either extraction or exhaust steam from a number of turbine generators or mechanical drive turbines. 150 PSIG steam is used primarily to provide the heat source for batch digesting in the pulping process, sheet drying in the pulp drying process and pump and fan operation in the power production process. 50 PSIG steam is used primarily in the black liquor evaporation process and as a liquor or water heater for various mill usage.

Topping-Cycle Operating and Efficiency Value Calculation

Applicants for facilities representing topping-cycle technology must demonstrate compliance with the topping-cycle operating standard and, if applicable, efficiency standard. Section 292.205(a)(1) of the Commission's regulations (18 C.F.R. § 292.205(a)(1)) establishes the operating standard for topping-cycle cogeneration facilities: the useful thermal energy output must be no less than 5 percent of the total energy output. Section 292.205(a)(2) (18 C.F.R. § 292.205(a)(2)) establishes the efficiency standard for topping-cycle cogeneration facilities for which installation commenced on or after March 13, 1980: the useful power output of the facility plus one-half the useful thermal energy output must (A) be no less than 42.5 percent of the total energy input of natural gas and oil to the facility; and (B) if the useful thermal energy output is less than 15 percent of the total energy output of the facility, be no less than 45 percent of the total energy input of natural gas and oil to the facility. To demonstrate compliance with the topping-cycle operating and/or efficiency standards, or to demonstrate that your facility is exempt from the efficiency standard based on the date that installation commenced, respond to lines 13a through 13l below.

If you indicated in line 10a that your facility represents *both* topping-cycle and bottoming-cycle cogeneration technology, then respond to lines 13a through 13l below considering only the energy inputs and outputs attributable to the topping-cycle portion of your facility. Your mass and heat balance diagram must make clear which mass and energy flow values and system components are for which portion (topping or bottoming) of the cogeneration system.

13a Indicate the annual average rate of useful thermal energy output made available to the host(s), net of any heat contained in condensate return or make-up water	1,156,710,460 Btu/h
13b Indicate the annual average rate of net electrical energy output	43,160 kW
13c Multiply line 13b by 3,412 to convert from kW to Btu/h	147,261,920 Btu/h
13d Indicate the annual average rate of mechanical energy output taken directly off of the shaft of a prime mover for purposes not directly related to power production (this value is usually zero)	0 hp
13e Multiply line 13d by 2,544 to convert from hp to Btu/h	0.0 Btu/h
13f Indicate the annual average rate of energy input from natural gas and oil	272,300,000 Btu/h
13g Topping-cycle operating value = 100 * 13a / (13a + 13c + 13e)	88.7 %
13h Topping-cycle efficiency value = 100 * (0.5*13a + 13c + 13e) / 13f	100 %

13i Compliance with operating standard: Is the operating value shown in line 13g greater than or equal to 5%?

☒ Yes (complies with operating standard) ☐ No (does not comply with operating standard)

13j Did installation of the facility in its current form commence on or after March 13, 1980?

☒ Yes. Your facility is subject to the efficiency requirements of 18 C.F.R. § 292.205(a)(2). Demonstrate compliance with the efficiency requirement by responding to line 13k or 13l, as applicable, below.

☐ No. Your facility is exempt from the efficiency standard. Skip lines 13k and 13l.

13k Compliance with efficiency standard (for low operating value): If the operating value shown in line 13g is less than 15%, then indicate below whether the efficiency value shown in line 13h greater than or equal to 45%:

☐ Yes (complies with efficiency standard) ☐ No (does not comply with efficiency standard)

13l Compliance with efficiency standard (for high operating value): If the operating value shown in line 13g is greater than or equal to 15%, then indicate below whether the efficiency value shown in line 13h is greater than or equal to 42.5%:

☒ Yes (complies with efficiency standard) ☐ No (does not comply with efficiency standard)

Information Required for Bottoming-Cycle Cogeneration Facility

If you indicated in line 10a that your facility represents bottoming-cycle cogeneration technology, then you must respond to the items on pages 16 and 17. Otherwise, skip pages 16 and 17.

Usefulness of Bottoming-Cycle Thermal Output

The thermal energy output of a bottoming-cycle cogeneration facility is the energy related to the process(es) from which at least some of the reject heat is then used for power production. Pursuant to sections 292.202(c) and (e) of the Commission's regulations (18 C.F.R. § 292.202(c) and (e)), the thermal energy output of a qualifying bottoming-cycle cogeneration facility must be useful. In connection with this requirement, describe the process(es) from which at least some of the reject heat is used for power production by responding to lines 14a and 14b below.

14a Identify and describe each thermal host and each bottoming-cycle cogeneration process engaged in by each host. For hosts with multiple bottoming-cycle cogeneration processes, provide the data for each process *in separate rows.*

	Name of entity (thermal host) performing the process from which at least some of the reject heat is used for power production	Thermal host's relationship to facility; Thermal host's process type	Has the energy input to the thermal host been augmented for purposes of increasing power production capacity? (if Yes, describe on p. 19)
1)		Select thermal host's relationship to facility Select thermal host's process type	Yes ☐ No ☐
2)		Select thermal host's relationship to facility Select thermal host's process type	Yes ☐ No ☐
3)		Select thermal host's relationship to facility Select thermal host's process type	Yes ☐ No ☐

☐ Check here and continue in the Miscellaneous section starting on page 19 if additional space is needed

14b Demonstration of usefulness of thermal output: At a minimum, provide a brief description of each process identified above. In some cases, this brief description is sufficient to demonstrate usefulness. However, if your facility's process is not common, and/or if the usefulness of such thermal output is not reasonably clear, then you must provide additional details as necessary to demonstrate usefulness. Your application may be rejected and/or additional information may be required if an insufficient showing of usefulness is made. (Exception: If you have previously received a Commission certification approving a specific bottoming-cycle process related to the instant facility, then you need only provide a brief description of that process and a reference by date and docket number to the order certifying your facility with the indicated process. Such exemption may not be used if any material changes to the process have been made.) If additional space is needed, continue in the Miscellaneous section starting on page 19.

Bottoming-Cycle Operating and Efficiency Value Calculation

Applicants for facilities representing bottoming-cycle technology and for which installation commenced on or after March 13, 1990 must demonstrate compliance with the bottoming-cycle efficiency standards. Section 292.205(b) of the Commission's regulations (18 C.F.R. § 292.205(b)) establishes the efficiency standard for bottoming-cycle cogeneration facilities: the useful power output of the facility must be no less than 45 percent of the energy input of natural gas and oil for supplementary firing. To demonstrate compliance with the bottoming-cycle efficiency standard (if applicable), or to demonstrate that your facility is exempt from this standard based on the date that installation of the facility began, respond to lines 15a through 15h below.

If you indicated in line 10a that your facility represents *both* topping-cycle and bottoming-cycle cogeneration technology, then respond to lines 15a through 15h below considering only the energy inputs and outputs attributable to the bottoming-cycle portion of your facility. Your mass and heat balance diagram must make clear which mass and energy flow values and system components are for which portion of the cogeneration system (topping or bottoming).

15a Did installation of the facility in its current form commence on or after March 13, 1980?

☐ Yes. Your facility is subject to the efficiency requirement of 18 C.F.R. § 292.205(b). Demonstrate compliance with the efficiency requirement by responding to lines 15b through 15h below.

☐ No. Your facility is exempt from the efficiency standard. Skip the rest of page 17.

15b Indicate the annual average rate of net electrical energy output	kW
15c Multiply line 15b by 3,412 to convert from kW to Btu/h	0 Btu/h
15d Indicate the annual average rate of mechanical energy output taken directly off of the shaft of a prime mover for purposes not directly related to power production (this value is usually zero)	hp
15e Multiply line 15d by 2,544 to convert from hp to Btu/h	0 Btu/h
15f Indicate the annual average rate of supplementary energy input from natural gas or oil	Btu/h
15g Bottoming-cycle efficiency value = 100 * (15c + 15e) / 15f	0 %

15h Compliance with efficiency standard: Indicate below whether the efficiency value shown in line 15g is greater than or equal to 45%:

☐ Yes (complies with efficiency standard) ☐ No (does not comply with efficiency standard)

Certificate of Completeness, Accuracy and Authority

Applicant must certify compliance with and understanding of filing requirements by checking next to each item below and signing at the bottom of this section. Forms with incomplete Certificates of Completeness, Accuracy and Authority will be rejected by the Secretary of the Commission.

Signer identified below certifies the following: (check all items and applicable subitems)

☒ He or she has read the filing, including any information contained in any attached documents, such as cogeneration mass and heat balance diagrams, and any information contained in the Miscellaneous section starting on page 19, and knows its contents.

☒ He or she has provided all of the required information for certification, and the provided information is true as stated, to the best of his or her knowledge and belief.

☒ He or she possess full power and authority to sign the filing; as required by Rule 2005(a)(3) of the Commission's Rules of Practice and Procedure (18 C.F.R. § 385.2005(a)(3)), he or she is one of the following: (check one)

- ☐ The person on whose behalf the filing is made
- ☒ An officer of the corporation, trust, association, or other organized group on behalf of which the filing is made
- ☐ An officer, agent, or employe of the governmental authority, agency, or instrumentality on behalf of which the filing is made
- ☐ A representative qualified to practice before the Commission under Rule 2101 of the Commission's Rules of Practice and Procedure (18 C.F.R. § 385.2101) and who possesses authority to sign

☒ He or she has reviewed all automatic calculations and agrees with their results, unless otherwise noted in the Miscellaneous section starting on page 19.

☒ He or she has provided a copy of this Form 556 and all attachments to the utilities with which the facility will interconnect and transact (see lines 4a through 4d), as well as to the regulatory authorities of the states in which the facility and those utilities reside. See the Required Notice to Public Utilities and State Regulatory Authorities section on page 3 for more information.

Provide your signature, address and signature date below. Rule 2005(c) of the Commission's Rules of Practice and Procedure (18 C.F.R. § 385.2005(c)) provides that persons filing their documents electronically may use typed characters representing his or her name to sign the filed documents. A person filing this document electronically should sign (by typing his or her name) in the space provided below.

Your Signature	Your address	Date
Sheila Jordan Cunningham - See Miscellaneous, page 19	P.O. Box 80407, 1001 Tillman St., Memphis, TN 38108-0407	10/19/2012

Audit Notes

Commission Staff Use Only: ☐

Miscellaneous

Use this space to provide any information for which there was not sufficient space in the previous sections of the form to provide. For each such item of information *clearly identify the line number that the information belongs to.* You may also use this space to provide any additional information you believe is relevant to the certification of your facility.

Your response below is not limited to one page. Additional page(s) will automatically be inserted into this form if the length of your response exceeds the space on this page. Use as many pages as you require.

Description of biomass fuel sources from line 6a:
Black Liquor (spent pulping liquor from the Kraft pulping process); wood residue from wood yard operations; and purchased wood fuel.

Information related to the Signature on page 18:
Signed by Sheila Jordan Cunningham, as Corporate Secretary of Buckeye Florida Corporation, sole general partner of Buckeye Florida, Limited Partnership, a Delaware limited partnership, on behalf of the partnership.

Foley Steam Generation and Steam Usage Diagram - FORM 556

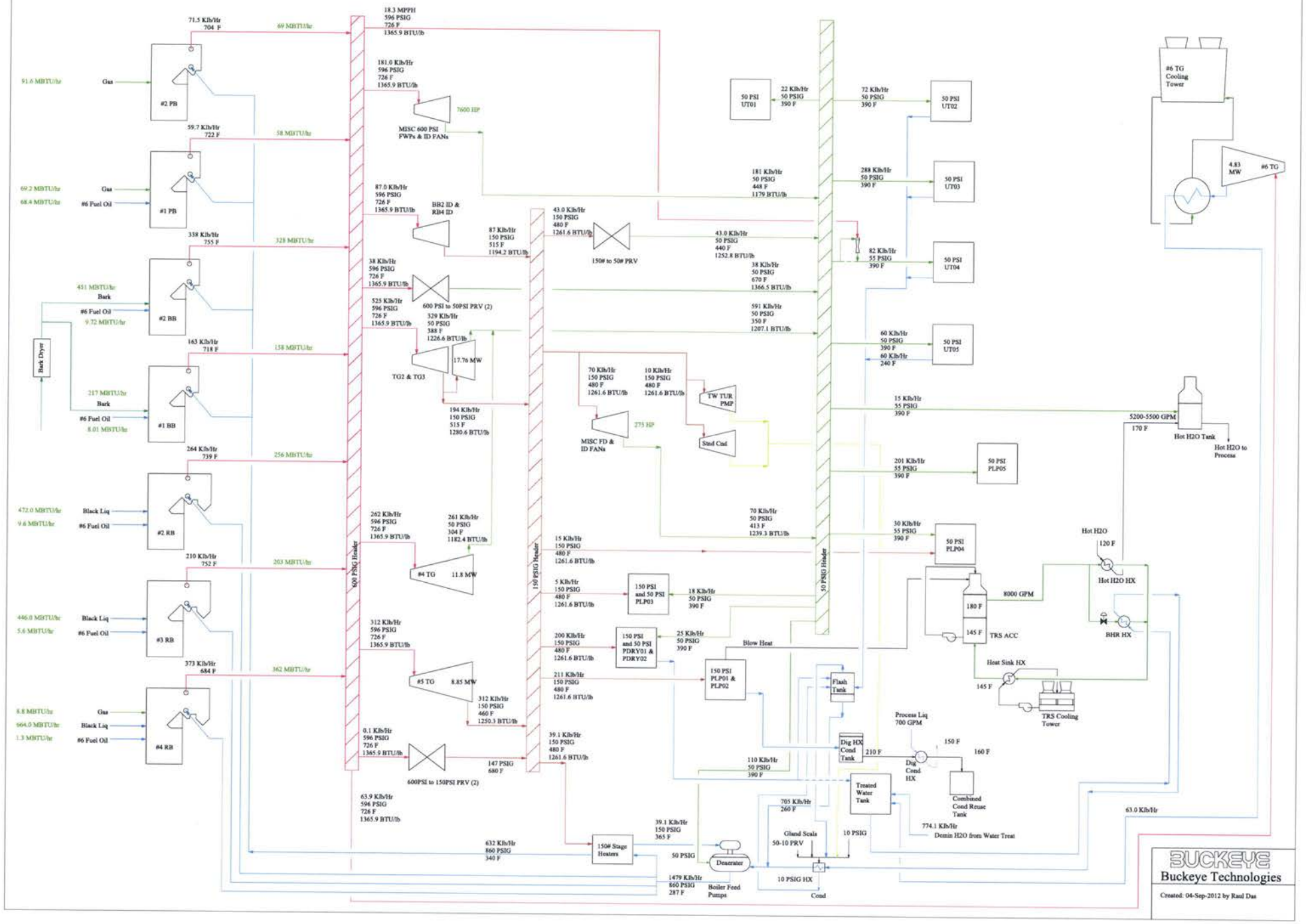

OERTEL, FERNANDEZ, BRYANT & ATKINSON, P.A.

MAILING ADDRESS: POST OFFICE BOX 1110 | TALLAHASSEE, FLORIDA 32302-1110

OFFICES: 301 S. BRONOUGH STREET, FIFTH FLOOR | TALLAHASSEE, FLORIDA 32301
PHONE: 850-521-0700 | FAX: 850-521-0720 | WWW.OHFC.COM

ATTORNEYS:
TIMOTHY P. ATKINSON
M. CHRISTOPHER BRYANT
C. ANTHONY CLEVELAND
SEGUNDO J. FERNANDEZ
PRESTON MCLANE
ANGELA FARFORD
KENNETH G. OERTEL
TIMOTHY J. PERRY

September 24, 2012

Via Overnight Delivery
FEDEX # 7939 2242 7757

Ms. Pauline Robinson
Florida Public Service Commission
2540 Shumard Oak Boulevard
Tallahassee, Florida 32399-0850

Re: PSC Docket 120196-EQ, Buckeye Florida Limited Partnership's Petition for Certification as a Qualifying Facility; FERC Docket QF13-51-000, Buckeye Florida Limited Partnership's Self- Certification as a Qualifying Cogeneration Facility

Dear Ms. Robinson,

This letter is to follow-up on my correspondence of August 30, 2012. Enclosed please find notice of Buckeye Florida Limited Partnership's Self-Certification as a Qualifying Cogeneration Facility with the Federal Energy Regulatory Commission in FERC Docket QF13-51-000.

Should you have any questions, please feel free to contact me.

Best regards,

Timothy J. Perry

Enclosure
cc: Sheila Jordan Cunningham, Buckeye
Brad Ottinger, Buckeye
Pat Barbaree, Buckeye
Mr. S. Curtis Kiser, FPSC

FEDERAL ENERGY REGULATORY COMMISSION
WASHINGTON, DC

OMB Control # 1902-0075
Expiration 5/31/2013

Form 556 Certification of Qualifying Facility (QF) Status for a Small Power Production or Cogeneration Facility

General

Questions about completing this form should be sent to Form556@ferc.gov. Information about the Commission's QF program, answers to frequently asked questions about QF requirements or completing this form, and contact information for QF program staff are available at the Commission's QF website, www.ferc.gov/QF. The Commission's QF website also provides links to the Commission's QF regulations (18 C.F.R. § 131.80 and Part 292), as well as other statutes and orders pertaining to the Commission's QF program.

Who Must File

Any applicant seeking QF status or recertification of QF status for a generating facility with a net power production capacity (as determined in lines 7a through 7g below) greater than 1000 kW must file a self-certification or an application for Commission certification of QF status, which includes a properly completed Form 556. Any applicant seeking QF status for a generating facility with a net power production capacity 1000 kW or less is exempt from the certification requirement, and is therefore not required to complete or file a Form 556. *See* 18 C.F.R. § 292.203.

How to Complete the Form 556

This form is intended to be completed by responding to the items in the order they are presented, according to the instructions given. If you need to back-track, you may need to clear certain responses before you will be allowed to change other responses made previously in the form. If you experience problems, click on the nearest help button ( ) for assistance, or contact Commission staff at Form556@ferc.gov.

Certain lines in this form will be automatically calculated based on responses to previous lines, with the relevant formulas shown. You must respond to all of the previous lines within a section before the results of an automatically calculated field will be displayed. If you disagree with the results of any automatic calculation on this form, contact Commission staff at Form556@ferc.gov to discuss the discrepancy before filing.

You must complete all lines in this form unless instructed otherwise. Do not alter this form or save this form in a different format. Incomplete or altered forms, or forms saved in formats other than PDF, will be rejected.

How to File a Completed Form 556

Applicants are required to file their Form 556 electronically through the Commission's eFiling website (see instructions on page 2). By filing electronically, you will reduce your filing burden, save paper resources, save postage or courier charges, help keep Commission expenses to a minimum, and receive a much faster confirmation (via an email containing the docket number assigned to your facility) that the Commission has received your filing.

If you are simultaneously filing both a waiver request and a Form 556 as part of an application for Commission certification, see the "Waiver Requests" section on page 3 for more information on how to file.

Paperwork Reduction Act Notice

This form is approved by the Office of Management and Budget (OMB Control No. 1902-0075, expiration 05/31/2013). Compliance with the information requirements established by the FERC Form No. 556 is required to obtain or maintain status as a QF. See 18 C.F.R. § 131.80 and Part 292. An agency may not conduct or sponsor, and a person is not required to respond to, a collection of information unless it displays a currently valid OMB control number. The estimated burden for completing the FERC Form No. 556, including gathering and reporting information, is as follows: 3 hours for self-certification of a small power production facility, 8 hours for self-certifications of a cogeneration facility, 6 hours for an application for Commission certification of a small power production facility, and 50 hours for an application for Commission certification of a cogeneration facility. Send comments regarding this burden estimate or any aspect of this collection of information, including suggestions for reducing this burden, to the following: Information Clearance Officer, Office of the Executive Director (ED-32), Federal Energy Regulatory Commission, 888 First Street N.E., Washington, DC 20426; and Desk Officer for FERC, Office of Information and Regulatory Affairs, Office of Management and Budget, Washington, DC 20503 (oira_submission@omb.eop.gov). Include the Control No. 1902-0075 in any correspondence.

Electronic Filing (eFiling)

To electronically file your Form 556, visit the Commission's QF website at www.ferc.gov/QF and click the eFiling link.

If you are eFiling your first document, you will need to register with your name, email address, mailing address, and phone number. If you are registering on behalf of an employer, then you will also need to provide the employer name, alternate contact name, alternate contact phone number and and alternate contact email.

Once you are registered, log in to eFiling with your registered email address and the password that you created at registration. Follow the instructions. When prompted, select one of the following QF-related filing types, as appropriate, from the Electric or General filing category.

Filing category	Filing Type as listed in eFiling	Description
Electric	(Fee) Application for Commission Cert. as Cogeneration QF	Use to submit an application for Commission certification or Commission recertification of a cogeneration facility as a QF.
	(Fee) Application for Commission Cert. as Small Power QF	Use to submit an application for Commission certification or Commission recertification of a small power production facility as a QF.
	Self-Certification Notice (QF, EG, FC)	Use to submit a notice of self-certification of your facility (cogeneration or small power production) as a QF.
	Self-Recertification of Qualifying Facility (QF)	Use to submit a notice of self-recertification of your facility (cogeneration or small power production) as a QF.
	Supplemental Information or Request	Use to correct or supplement a Form 556 that was submitted with errors or omissions, or for which Commission staff has requested additional information. Do *not* use this filing type to report new changes to a facility or its ownership; rather, use a self-recertification or Commission recertification to report such changes.
General	(Fee) Petition for Declaratory Order (not under FPA Part 1)	Use to submit a petition for declaratory order granting a waiver of Commission QF regulations pursuant to 18 C.F.R. §§ 292.204(a)(3) and/or 292.205(c). A Form 556 is not required for a petition for declaratory order unless Commission recertification is being requested as part of the petition.

You will be prompted to submit your filing fee, if applicable, during the electronic submission process. Filing fees can be paid via electronic bank account debit or credit card.

During the eFiling process, you will be prompted to select your file(s) for upload from your computer.

Filing Fee

No filing fee is required if you are submitting a self-certification or self-recertification of your facility as a QF pursuant to 18 C.F.R. § 292.207(a).

A filing fee is required if you are filing either of the following:

(1) an application for Commission certification or recertification of your facility as a QF pursuant to 18 C.F.R. § 292.207(b), or
(2) a petition for declaratory order granting waiver pursuant to 18 C.F.R. §§ 292.204(a)(3) and/or 292.205(c).

The current fees for applications for Commission certifications and petitions for declaratory order can be found by visiting the Commission's QF website at www.ferc.gov/QF and clicking the Fee Schedule link.

You will be prompted to submit your filing fee, if applicable, during the electronic filing process described on page 2.

Required Notice to Utilities and State Regulatory Authorities

Pursuant to 18 C.F.R. § 292.207(a)(ii), you must provide a copy of your self-certification or request for Commission certification to the utilities with which the facility will interconnect and/or transact, as well as to the State regulatory authorities of the states in which your facility and those utilities reside. Links to information about the regulatory authorities in various states can be found by visiting the Commission's QF website at www.ferc.gov/QF and clicking the Notice Requirements link.

What to Expect From the Commission After You File

An applicant filing a Form 556 electronically will receive an email message acknowledging receipt of the filing and showing the docket number assigned to the filing. Such email is typically sent within one business day, but may be delayed pending confirmation by the Secretary of the Commission of the contents of the filing.

An applicant submitting a self-certification of QF status should expect to receive no documents from the Commission, other than the electronic acknowledgement of receipt described above. Consistent with its name, a self-certification is a certification *by the applicant itself* that the facility meets the relevant requirements for QF status, and does not involve a determination by the Commission as to the status of the facility. An acknowledgement of receipt of a self-certification, in particular, does not represent a determination by the Commission with regard to the QF status of the facility. An applicant self-certifying may, however, receive a rejection, revocation or deficiency letter if its application is found, during periodic compliance reviews, not to comply with the relevant requirements.

An applicant submitting a request for Commission certification will receive an order either granting or denying certification of QF status, or a letter requesting additional information or rejecting the application. Pursuant to 18 C.F.R. § 292.207(b)(3), the Commission must act on an application for Commission certification within 90 days of the later of the filing date of the application or the filing date of a supplement, amendment or other change to the application.

Waiver Requests

18 C.F.R. § 292.204(a)(3) allows an applicant to request a waiver to modify the method of calculation pursuant to 18 C.F.R. § 292.204(a)(2) to determine if two facilities are considered to be located at the same site, for good cause. 18 C.F.R. § 292.205(c) allows an applicant to request waiver of the requirements of 18 C.F.R. §§ 292.205(a) and (b) for operating and efficiency upon a showing that the facility will produce significant energy savings. A request for waiver of these requirements must be submitted as a petition for declaratory order, with the appropriate filing fee for a petition for declaratory order. Applicants requesting Commission recertification as part of a request for waiver of one of these requirements should electronically submit their completed Form 556 along with their petition for declaratory order, rather than filing their Form 556 as a separate request for Commission recertification. Only the filing fee for the petition for declaratory order must be paid to cover both the waiver request and the request for recertification *if such requests are made simultaneously.*

18 C.F.R. § 292.203(d)(2) allows an applicant to request a waiver of the Form 556 filing requirements, for good cause. Applicants filing a petition for declaratory order requesting a waiver under 18 C.F.R. § 292.203(d)(2) do not need to complete or submit a Form 556 with their petition.

Geographic Coordinates

If a street address does not exist for your facility, then line 3c of the Form 556 requires you to report your facility's geographic coordinates (latitude and longitude). Geographic coordinates may be obtained from several different sources. You can find links to online services that show latitude and longitude coordinates on online maps by visiting the Commission's QF webpage at www.ferc.gov/QF and clicking the Geographic Coordinates link. You may also be able to obtain your geographic coordinates from a GPS device, Google Earth (available free at http://earth.google.com), a property survey, various engineering or construction drawings, a property deed, or a municipal or county map showing property lines.

Filing Privileged Data or Critical Energy Infrastructure Information in a Form 556

The Commission's regulations provide procedures for applicants to either (1) request that any information submitted with a Form 556 be given privileged treatment because the information is exempt from the mandatory public disclosure requirements of the Freedom of Information Act, 5 U.S.C. § 552, and should be withheld from public disclosure; or (2) identify any documents containing critical energy infrastructure information (CEII) as defined in 18 C.F.R. § 388.113 that should not be made public.

If you are seeking privileged treatment or CEII status for any data in your Form 556, then you must follow the procedures in 18 C.F.R. § 388.112. See www.ferc.gov/help/filing-guide/file-ceii.asp for more information.

Among other things (see 18 C.F.R. § 388.112 for other requirements), applicants seeking privileged treatment or CEII status for data submitted in a Form 556 must prepare and file both (1) a complete version of the Form 556 (containing the privileged and/or CEII data), and (2) a public version of the Form 556 (with the privileged and/or CEII data redacted). Applicants preparing and filing these different versions of their Form 556 must indicate below the security designation of this version of their document. If you are *not* seeking privileged treatment or CEII status for any of your Form 556 data, then you should not respond to any of the items on this page.

☐ **Non-Public**: Applicant is seeking privileged treatment and/or CEII status for data contained in the Form 556 lines indicated below. This non-public version of the applicant's Form 556 contains all data, including the data that is redacted in the (separate) public version of the applicant's Form 556.
☐ **Public (redacted)**: Applicant is seeking privileged treatment and/or CEII status for data contained in the Form 556 lines indicated below. This public version of the applicants's Form 556 contains all data except for data from the lines indicated below, which has been redacted.
Privileged: Indicate below which lines of your form contain data for which you are seeking privileged treatment
Critical Energy Infrastructure Information (CEII): Indicate below which lines of your form contain data for which you are seeking CEII status

The eFiling process described on page 2 will allow you to identify which versions of the electronic documents you submit are public, privileged and/or CEII. The filenames for such documents should begin with "Public", "Priv", or "CEII", as applicable, to clearly indicate the security designation of the file. Both versions of the Form 556 should be unaltered PDF copies of the Form 556, as available for download from www.ferc.gov/QF. To redact data from the public copy of the submittal, simply omit the relevant data from the Form. For numerical fields, leave the redacted fields blank. For text fields, complete as much of the field as possible, and replace the redacted portions of the field with the word "REDACTED" in brackets. Be sure to identify above all fields which contain data for which you are seeking non-public status.

The Commission is not responsible for detecting or correcting filer errors, including those errors related to security designation. If your documents contain sensitive information, make sure they are filed using the proper security designation.

FEDERAL ENERGY REGULATORY COMMISSION
WASHINGTON, DC

OMB Control # 1902-0075
Expiration 5/31/2013

Form 556 Certification of Qualifying Facility (QF) Status for a Small Power Production or Cogeneration Facility

Application Information

1a Full name of applicant (legal entity on whose behalf qualifying facility status is sought for this facility)
Buckeye Florida, Limited Partnership

1b Applicant street address
One Buckeye Drive

1c City
Perry

1d State/province
FL

1e Postal code
32348

1f Country (if not United States)

1g Telephone number
850 584 1240

1h Has the instant facility ever previously been certified as a QF? Yes ☐ No ☒

1i If yes, provide the docket number of the last known QF filing pertaining to this facility: QF ___ - ___ - ___

1j Under which certification process is the applicant making this filing?

☒ Notice of self-certification (see note below)

☐ Application for Commission certification (requires filing fee; see "Filing Fee" section on page 3)

Note: a notice of self-certification is a notice by the applicant itself that its facility complies with the requirements for QF status. A notice of self-certification does not establish a proceeding, and the Commission does not review a notice of self-certification to verify compliance. See the "What to Expect From the Commission After You File" section on page 3 for more information.

1k What type(s) of QF status is the applicant seeking for its facility? (check all that apply)

☐ Qualifying small power production facility status ☒ Qualifying cogeneration facility status

1l What is the purpose and expected effective date(s) of this filing?

☒ Original certification; facility expected to be installed by 11/1/10 and to begin operation on 11/1/10

☐ Change(s) to a previously certified facility to be effective on ___
(identify type(s) of change(s) below, and describe change(s) in the Miscellaneous section starting on page 19)

☐ Name change and/or other administrative change(s)

☐ Change in ownership

☐ Change(s) affecting plant equipment, fuel use, power production capacity and/or cogeneration thermal output

☐ Supplement or correction to a previous filing submitted on ___
(describe the supplement or correction in the Miscellaneous section starting on page 19)

1m If any of the following three statements is true, check the box(es) that describe your situation and complete the form to the extent possible, explaining any special circumstances in the Miscellaneous section starting on page 19.

☐ The instant facility complies with the Commission's QF requirements by virtue of a waiver of certain regulations previously granted by the Commission in an order dated ___ (specify any other relevant waiver orders in the Miscellaneous section starting on page 19)

☐ The instant facility would comply with the Commission's QF requirements if a petition for waiver submitted concurrently with this application is granted

☐ The instant facility complies with the Commission's regulations, but has special circumstances, such as the employment of unique or innovative technologies not contemplated by the structure of this form, that make the demonstration of compliance via this form difficult or impossible (describe in Misc. section starting on p. 19)

Contact Information

2a Name of contact person
BEN Crowe

2b Telephone number
850 584 1829

2c Which of the following describes the contact person's relationship to the applicant? (check one)

- ☐ Applicant (self)
- ☐ Employee, owner or partner of applicant authorized to represent the applicant
- ☒ Employee of a company affiliated with the applicant authorized to represent the applicant on this matter
- ☐ Lawyer, consultant, or other representative authorized to represent the applicant on this matter

2d Company or organization name (if applicant is an individual, check here and skip to line 2e) ☐
Buckeye Florida Limited Partnership

2e Street address (if same as Applicant, check here and skip to line 3a) ☐
One Buckeye Drive

2f City
Perry

2g State/province
Florida

2h Postal code
32348

2i Country (if not United States)

Facility Identification and Location

3a Facility name
Buckeye Florida Limited Partnership

3b Street address (if a street address does not exist for the facility, check here and skip to line 3c) ☐
One Buckeye Drive,

3c Geographic coordinates: If you indicated that no street address exists for your facility by checking the box in line 3b, then you must specify the latitude and longitude coordinates of the facility in degrees (to three decimal places). Use the following formula to convert to decimal degrees from degrees, minutes and seconds: decimal degrees = degrees + (minutes/60) + (seconds/3600). See the "Geographic Coordinates" section on page 4 for help. If you provided a street address for your facility in line 3b, then specifying the geographic coordinates below is optional.

Longitude ☐ East (+) ☐ West (-) _____ degrees

Latitude ☐ North (+) ☐ South (-) _____ degrees

3d City (if unincorporated, check here and enter nearest city) ☐
Perry

3e State/province
Florida

3f County (or check here for independent city) ☐
Taylor County, Florida

3g Country (if not United States)

Transacting Utilities

Identify the electric utilities that are contemplated to transact with the facility.

4a Identify utility interconnecting with the facility
Progress Energy Florida, Inc

4b Identify utilities providing wheeling service or check here if none ☒

4c Identify utilities purchasing the useful electric power output or check here if none ☐
Progress Energy Florida, Inc

4d Identify utilities providing supplementary power, backup power, maintenance power, and/or interruptible power service or check here if none ☐
Progress Energy Florida, Inc

Ownership and Operation

5a Direct ownership as of effective date or operation date: Identify all direct owners of the facility holding at least 10 percent equity interest. For each identified owner, also (1) indicate whether that owner is an electric utility, as defined in section 3(22) of the Federal Power Act (16 U.S.C. 796(22)), or a holding company, as defined in section 1262(8) of the Public Utility Holding Company Act of 2005 (42 U.S.C. 16451(8)), and (2) for owners which are electric utilities or holding companies, provide the percentage of equity interest in the facility held by that owner. If no direct owners hold at least 10 percent equity interest in the facility, then provide the required information for the two direct owners with the largest equity interest in the facility.

	Full legal names of direct owners	Electric utility or holding company	If Yes, % equity interest
1)	Buckeye Technologies, Inc	Yes ☐ No ☒	100 %
2)		Yes ☐ No ☐	%
3)		Yes ☐ No ☐	%
4)		Yes ☐ No ☐	%
5)		Yes ☐ No ☐	%
6)		Yes ☐ No ☐	%
7)		Yes ☐ No ☐	%
8)		Yes ☐ No ☐	%
9)		Yes ☐ No ☐	%
10)		Yes ☐ No ☐	%

☐ Check here and continue in the Miscellaneous section starting on page 19 if additional space is needed

5b Upstream (i.e., indirect) ownership as of effective date or operation date: Identify all upstream (i.e., indirect) owners of the facility that both (1) hold at least 10 percent equity interest in the facility, and (2) are electric utilities, as defined in section 3(22) of the Federal Power Act (16 U.S.C. 796(22)), or holding companies, as defined in section 1262(8) of the Public Utility Holding Company Act of 2005 (42 U.S.C. 16451(8)). Also provide the percentage of equity interest in the facility held by such owners. (Note that, because upstream owners may be subsidiaries of one another, total percent equity interest reported may exceed 100 percent.)

Check here if no such upstream owners exist. ☒

	Full legal names of electric utility or holding company upstream owners	% equity interest
1)		%
2)		%
3)		%
4)		%
5)		%
6)		%
7)		%
8)		%
9)		%
10)		%

☐ Check here and continue in the Miscellaneous section starting on page 19 if additional space is needed

5c Identify the facility operator

Buckeye Florida Limited Partnership

Energy Input

6a Describe the primary energy input: (check one main category and, if applicable, one subcategory)

- [x] Biomass (specify)
  - [ ] Landfill gas
  - [ ] Manure digester gas
  - [ ] Municipal solid waste
  - [ ] Sewage digester gas
  - [ ] Wood
  - [x] Other biomass (describe on page 19)
- [ ] Waste (specify type below in line 6b)
- [ ] Renewable resources (specify)
  - [ ] Hydro power - river
  - [ ] Hydro power - tidal
  - [ ] Hydro power - wave
  - [ ] Solar - photovoltaic
  - [ ] Solar - thermal
  - [ ] Wind
  - [ ] Other renewable resource (describe on page 19)
- [ ] Geothermal
- [ ] Fossil fuel (specify)
  - [ ] Coal (not waste)
  - [ ] Fuel oil/diesel
  - [ ] Natural gas (not waste)
  - [ ] Other fossil fuel (describe on page 19)
- [ ] Other (describe on page 19)

6b If you specified "waste" as the primary energy input in line 6a, indicate the type of waste fuel used: (check one)

- [ ] Waste fuel listed in 18 C.F.R. § 292.202(b) (specify one of the following)
  - [ ] Anthracite culm produced prior to July 23, 1985
  - [ ] Anthracite refuse that has an average heat content of 6,000 Btu or less per pound and has an average ash content of 45 percent or more
  - [ ] Bituminous coal refuse that has an average heat content of 9,500 Btu per pound or less and has an average ash content of 25 percent or more
  - [ ] Top or bottom subbituminous coal produced on Federal lands or on Indian lands that has been determined to be waste by the United States Department of the Interior's Bureau of Land Management (BLM) or that is located on non-Federal or non-Indian lands outside of BLM's jurisdiction, provided that the applicant shows that the latter coal is an extension of that determined by BLM to be waste
  - [ ] Coal refuse produced on Federal lands or on Indian lands that has been determined to be waste by the BLM or that is located on non- Federal or non-Indian lands outside of BLM's jurisdiction, provided that applicant shows that the latter is an extension of that determined by BLM to be waste
  - [ ] Lignite produced in association with the production of montan wax and lignite that becomes exposed as a result of such a mining operation
  - [ ] Gaseous fuels (except natural gas and synthetic gas from coal) (describe on page 19)
  - [ ] Waste natural gas from gas or oil wells (describe on page 19 how the gas meets the requirements of 18 C.F.R. § 2.400 for waste natural gas; include with your filing any materials necessary to demonstrate compliance with 18 C.F.R. § 2.400)
  - [ ] Materials that a government agency has certified for disposal by combustion (describe on page 19)
  - [ ] Heat from exothermic reactions (describe on page 19)
  - [ ] Residual heat (describe on page 19)
  - [ ] Used rubber tires
  - [ ] Plastic materials
  - [ ] Refinery off-gas
  - [ ] Petroleum coke
- [ ] Other waste energy input that has little or no commercial value and exists in the absence of the qualifying facility industry (describe in the Miscellaneous section starting on page 19; include a discussion of the fuel's lack of commercial value and existence in the absence of the qualifying facility industry)

6c Provide the average energy input, calculated on a calendar year basis, in terms of Btu/h for the following fossil fuel energy inputs, and provide the related percentage of the total average annual energy input to the facility (18 C.F.R. § 292.202(j)). For any oil or natural gas fuel, use lower heating value (18 C.F.R. § 292.202(m)).

Fuel	Annual average energy input for specified fuel	Percentage of total annual energy input
Natural gas	199,210,845 Btu/h	10 %
Oil-based fuels	26,428,117 Btu/h	1.3 %
Coal	0 Btu/h	0 %

Technical Facility Information

Indicate the maximum gross and maximum net electric power production capacity of the facility at the point(s) of delivery by completing the worksheet below. Respond to all items. If any of the parasitic loads and/or losses identified in lines 7b through 7e are negligible, enter zero for those lines.

7a The maximum gross power production capacity at the terminals of the individual generator(s) under the most favorable anticipated design conditions	60,200 kW
7b Parasitic station power used at the facility to run equipment which is necessary and integral to the power production process (boiler feed pumps, fans/blowers, office or maintenance buildings directly related to the operation of the power generating facility, etc.). If this facility includes non-power production processes (for instance, power consumed by a cogeneration facility's thermal host), do not include any power consumed by the non-power production activities in your reported parasitic station power.	11,360 kW
7c Electrical losses in interconnection transformers	0 kW
7d Electrical losses in AC/DC conversion equipment, if any	0 kW
7e Other interconnection losses in power lines or facilities (other than transformers and AC/DC conversion equipment) between the terminals of the generator(s) and the point of interconnection with the utility	0 kW
7f Total deductions from gross power production capacity = 7b + 7c + 7d + 7e	11,360.0 kW
7g Maximum net power production capacity = 7a - 7f	48,840.0 kW

7h Description of facility and primary components: Describe the facility and its operation. Identify all boilers, heat recovery steam generators, prime movers (any mechanical equipment driving an electric generator), electrical generators, photovoltaic solar equipment, fuel cell equipment and/or other primary power generation equipment used in the facility. Descriptions of components should include (as applicable) specifications of the nominal capacities for mechanical output, electrical output, or steam generation of the identified equipment. For each piece of equipment identified, clearly indicate how many pieces of that type of equipment are included in the plant, and which components are normally operating or normally in standby mode. Provide a description of how the components operate as a system. Applicants for cogeneration facilities do not need to describe operations of systems that are clearly depicted on and easily understandable from a cogeneration facility's attached mass and heat balance diagram; however, such applicants should provide any necessary description needed to understand the sequential operation of the facility depicted in their mass and heat balance diagram. If additional space is needed, continue in the Miscellaneous section starting on page 19.

This facility is a kraft pulp mill with internal power production capability. The steam and power plant are described as follows: A 600lb Steam header is supplied with 750 F steam from 3 Recovery Boilers (955 kpph steam), 2 Bark Boilers (550 kpph steam), 1 Natural Gas Boiler (190 kpph steam), and 1 #6 Fuel Oil/Natural Gas Boiler (190 kpph steam). The 600 lb header supplies 5 steam turbine generators. Two turbine generators with a 150lb header extraction and 50lb header exhaust for a peak capacity of 19.5 MW. One turbine generator with a 50lb header exhaust for a peak capacity of 13.0 MW. One turbine generator with a 150lb header exhaust for a peak capacity of 10.7 MW. One Condensing turbine generator with a peak capacity of 15.0 MW. 600lb and 150lb steam is used to drive mechanical steam turbines for Boiler Feedwater pumps and Boiler Fans. 150lb header also supplies steam to boiler feedwater heaters. 50lb header supplies steam to feedwater deaerator and 4 sets of Black Liquor Evaporators/ Concentrators. Black Liquor Evaporators/Concentrators evaporate water from spent pulping liquor, concentrating the liquor from 16% solids to 68% solids. Black liquor is the primary fuel source for Recovery Boilers. There is also a 10lb steam header that collects waste steam and preheats boiler feedwater prior to deaeration. Boiler water is supplied from a demineralized water plant consisting of cation and anion treatment units.

Information Required for Small Power Production Facility

If you indicated in line 1k that you are seeking qualifying small power production facility status for your facility, then you must respond to the items on this page. Otherwise, skip page 10.

Certification of Compliance with Size Limitations

Pursuant to 18 C.F.R. § 292.204(a), the power production capacity of any small power production facility, together with the power production capacity of any other small power production facilities that use the same energy resource, are owned by the same person(s) or its affiliates, and are located at the same site, may not exceed 80 megawatts. To demonstrate compliance with this size limitation, or to demonstrate that your facility is exempt from this size limitation under the Solar, Wind, Waste, and Geothermal Power Production Incentives Act of 1990 (Pub. L. 101-575, 104 Stat. 2834 (1990) *as amended by* Pub. L. 102-46, 105 Stat. 249 (1991)), respond to lines 8a through 8e below (as applicable).

8a Identify any facilities with electrical generating equipment located within 1 mile of the electrical generating equipment of the instant facility, and for which any of the entities identified in lines 5a or 5b, or their affiliates, holds at least a 5 percent equity interest.

Check here if no such facilities exist. ☐

	Facility location (city or county, state)	Root docket # (if any)	Common owner(s)	Maximum net power production capacity
1)		QF -		kW
2)		QF -		kW
3)		QF -		kW

☐ Check here and continue in the Miscellaneous section starting on page 19 if additional space is needed

8b The Solar, Wind, Waste, and Geothermal Power Production Incentives Act of 1990 (Incentives Act) provides exemption from the size limitations in 18 C.F.R. § 292.204(a) for certain facilities that were certified prior to 1995. Are you seeking exemption from the size limitations in 18 C.F.R. § 292.204(a) by virtue of the Incentives Act?

☐ Yes (continue at line 8c below) ☐ No (skip lines 8c through 8e)

8c Was the original notice of self-certification or application for Commission certification of the facility filed on or before December 31, 1994? Yes ☐ No ☐

8d Did construction of the facility commence on or before December 31, 1999? Yes ☐ No ☐

8e If you answered No in line 8d, indicate whether reasonable diligence was exercised toward the completion of the facility, taking into account all factors relevant to construction? Yes ☐ No ☐ If you answered Yes, provide a brief narrative explanation in the Miscellaneous section starting on page 19 of the construction timeline (in particular, describe why construction started so long after the facility was certified) and the diligence exercised toward completion of the facility.

Certification of Compliance with Fuel Use Requirements

Pursuant to 18 C.F.R. § 292.204(b), qualifying small power production facilities may use fossil fuels, in minimal amounts, for only the following purposes: ignition; start-up; testing; flame stabilization; control use; alleviation or prevention of unanticipated equipment outages; and alleviation or prevention of emergencies, directly affecting the public health, safety, or welfare, which would result from electric power outages. The amount of fossil fuels used for these purposes may not exceed 25 percent of the total energy input of the facility during the 12-month period beginning with the date the facility first produces electric energy or any calendar year thereafter.

9a Certification of compliance with 18 C.F.R. § 292.204(b) with respect to uses of fossil fuel:

☐ Applicant certifies that the facility will use fossil fuels *exclusively* for the purposes listed above.

9b Certification of compliance with 18 C.F.R. § 292.204(b) with respect to amount of fossil fuel used annually:

☐ Applicant certifies that the amount of fossil fuel used at the facility will not, in aggregate, exceed 25 percent of the total energy input of the facility during the 12-month period beginning with the date the facility first produces electric energy or any calendar year thereafter.

Information Required for Cogeneration Facility

If you indicated in line 1k that you are seeking qualifying cogeneration facility status for your facility, then you must respond to the items on pages 11 through 13. Otherwise, skip pages 11 through 13.

General Cogeneration Information

Pursuant to 18 C.F.R. § 292.202(c), a cogeneration facility produces electric energy and forms of useful thermal energy (such as heat or steam) used for industrial, commercial, heating, or cooling purposes, through the sequential use of energy. Pursuant to 18 C.F.R. § 292.202(s), "sequential use" of energy means the following: (1) for a topping-cycle cogeneration facility, the use of reject heat from a power production process in sufficient amounts in a thermal application or process to conform to the requirements of the operating standard contained in 18 C.F.R. § 292.205(a); or (2) for a bottoming-cycle cogeneration facility, the use of at least some reject heat from a thermal application or process for power production.

10a What type(s) of cogeneration technology does the facility represent? (check all that apply)

☒ Topping-cycle cogeneration ☐ Bottoming-cycle cogeneration

10b To help demonstrate the sequential operation of the cogeneration process, and to support compliance with other requirements such as the operating and efficiency standards, include with your filing a mass and heat balance diagram depicting average annual operating conditions. This diagram must include certain items and meet certain requirements, as described below. You must check next to the description of each requirement below to certify that you have complied with these requirements.

Check to certify compliance with indicated requirement	Requirement
☒	Diagram must show orientation within system piping and/or ducts of all prime movers, heat recovery steam generators, boilers, electric generators, and condensers (as applicable), as well as any other primary equipment relevant to the cogeneration process.
☒	Any average annual values required to be reported in lines 10b, 12a, 13a, 13b, 13d, 13f, 14a, 15b, 15d and/or 15f must be computed over the anticipated hours of operation.
☒	Diagram must specify all fuel inputs by fuel type and average annual rate in Btu/h. Fuel for supplementary firing should be specified separately and clearly labeled. All specifications of fuel inputs should use lower heating values.
☒	Diagram must specify average gross electric output in kW or MW for each generator.
☒	Diagram must specify average mechanical output (that is, any mechanical energy taken off of the shaft of the prime movers for purposes not directly related to electric power generation) in horsepower, if any. Typically, a cogeneration facility has no mechanical output.
☒	At each point for which working fluid flow conditions are required to be specified (see below), such flow condition data must include mass flow rate (in lb/h or kg/s), temperature (in °F, R, °C or K), absolute pressure (in psia or kPa) and enthalpy (in Btu/lb or kJ/kg). Exception: For systems where the working fluid is *liquid only* (no vapor at any point in the cycle) and where the type of liquid and specific heat of that liquid are clearly indicated on the diagram or in the Miscellaneous section starting on page 19, only mass flow rate and temperature (not pressure and enthalpy) need be specified. For reference, specific heat at standard conditions for pure liquid water is approximately 1.002 Btu/(lb*R) or 4.195 kJ/(kg*K).
☒	Diagram must specify working fluid flow conditions at input to and output from each steam turbine or other expansion turbine or back-pressure turbine.
☒	Diagram must specify working fluid flow conditions at delivery to and return from each thermal application.
☒	Diagram must specify working fluid flow conditions at make-up water inputs.

EPAct 2005 Requirements for Fundamental Use of Energy Output from Cogeneration Facilities

EPAct 2005 cogeneration facilities: The Energy Policy Act of 2005 (EPAct 2005) established a new section 210(n) of the Public Utility Regulatory Policies Act of 1978 (PURPA), 16 USC 824a-3(n), with additional requirements for any qualifying cogeneration facility that (1) is seeking to sell electric energy pursuant to section 210 of PURPA and (2) was either not a cogeneration facility on August 8, 2005, or had not filed a self-certification or application for Commission certification of QF status on or before February 1, 2006. These requirements were implemented by the Commission in 18 C.F.R. § 292.205(d). Complete the lines below, carefully following the instructions, to demonstrate whether these additional requirements apply to your cogeneration facility and, if so, whether your facility complies with such requirements.

11a Was your facility operating as a qualifying cogeneration facility on or before August 8, 2005? Yes ☐ No ☒

11b Was the initial filing seeking certification of your facility (whether a notice of self-certification or an application for Commission certification) filed on or before February 1, 2006? Yes ☐ No ☒

If the answer to either line 11a or 11b is Yes, then continue at line 11c below. Otherwise, if the answers to both lines 11a and 11b are No, skip to line 11e below.

11c With respect to the design and operation of the facility, have any changes been implemented on or after February 2, 2006 that affect general plant operation, affect use of thermal output, and/or increase net power production capacity from the plant's capacity on February 1, 2006?

☐ Yes (continue at line 11d below)

☐ No. Your facility is not subject to the requirements of 18 C.F.R. § 292.205(d) at this time. However, it may be subject to to these requirements in the future if changes are made to the facility. At such time, the applicant would need to recertify the facility to determine eligibility. Skip lines 11d through 11j.

11d Does the applicant contend that the changes identified in line 11c are not so significant as to make the facility a "new" cogeneration facility that would be subject to the 18 C.F.R. § 292.205(d) cogeneration requirements?

☐ Yes. Provide in the Miscellaneous section starting on page 19 a description of any relevant changes made to the facility (including the purpose of the changes) and a discussion of why the facility should not be considered a "new" cogeneration facility in light of these changes. Skip lines 11e through 11j.

☐ No. Applicant stipulates to the fact that it is a "new" cogeneration facility (for purposes of determining the applicability of the requirements of 18 C.F.R. § 292.205(d)) by virtue of modifications to the facility that were initiated on or after February 2, 2006. Continue below at line 11e.

11e Will electric energy from the facility be sold pursuant to section 210 of PURPA?

☒ Yes. The facility is an EPAct 2005 cogeneration facility. You must demonstrate compliance with 18 C.F.R. § 292.205(d)(2) by continuing at line 11f below.

☐ No. Applicant certifies that energy will *not* be sold pursuant to section 210 of PURPA. Applicant also certifies its understanding that it must recertify its facility in order to determine compliance with the requirements of 18 C.F.R. § 292.205(d) *before* selling energy pursuant to section 210 of PURPA in the future. Skip lines 11f through 11j.

11f Is the net power production capacity of your cogeneration facility, as indicated in line 7g above, less than or equal to 5,000 kW?

☐ Yes, the net power production capacity is less than or equal to 5,000 kW. 18 C.F.R. § 292.205(d)(4) provides a rebuttable presumption that cogeneration facilities of 5,000 kW and smaller capacity comply with the requirements for fundamental use of the facility's energy output in 18 C.F.R. § 292.205(d)(2). Applicant certifies its understanding that, should the power production capacity of the facility increase above 5,000 kW, then the facility must be recertified to (among other things) demonstrate compliance with 18 C.F.R. § 292.205(d)(2). Skip lines 11g through 11j.

☒ No, the net power production capacity is greater than 5,000 kW. Demonstrate compliance with the requirements for fundamental use of the facility's energy output in 18 C.F.R. § 292.205(d)(2) by continuing on the next page at line 11g.

EPAct 2005 Requirements for Fundamental Use of Energy Output from Cogeneration Facilities (continued)

Lines 11g through 11k below guide the applicant through the process of demonstrating compliance with the requirements for "fundamental use" of the facility's energy output. 18 C.F.R. § 292.205(d)(2). Only respond to the lines on this page if the instructions on the previous page direct you to do so. Otherwise, skip this page.

18 C.F.R. § 292.205(d)(2) requires that the electrical, thermal, chemical and mechanical output of an EPAct 2005 cogeneration facility is used fundamentally for industrial, commercial, residential or institutional purposes and is not intended fundamentally for sale to an electric utility, taking into account technological, efficiency, economic, and variable thermal energy requirements, as well as state laws applicable to sales of electric energy from a qualifying facility to its host facility. If you were directed on the previous page to respond to the items on this page, then your facility is an EPAct 2005 cogeneration facility that is subject to this "fundamental use" requirement.

The Commission's regulations provide a two-pronged approach to demonstrating compliance with the requirements for fundamental use of the facility's energy output. First, the Commission has established in 18 C.F.R. § 292.205(d)(3) a "fundamental use test" that can be used to demonstrate compliance with 18 C.F.R. § 292.205(d)(2). Under the fundamental use test, a facility is considered to comply with 18 C.F.R. § 292.205(d)(2) if at least 50 percent of the facility's total annual energy output (including electrical, thermal, chemical and mechanical energy output) is used for industrial, commercial, residential or institutional purposes.

Second, an applicant for a facility that does not pass the fundamental use test may provide a narrative explanation of and support for its contention that the facility nonetheless meets the requirement that the electrical, thermal, chemical and mechanical output of an EPAct 2005 cogeneration facility is used fundamentally for industrial, commercial, residential or institutional purposes and is not intended fundamentally for sale to an electric utility, taking into account technological, efficiency, economic, and variable thermal energy requirements, as well as state laws applicable to sales of electric energy from a qualifying facility to its host facility.

Complete lines 11g through 11j below to determine compliance with the fundamental use test in 18 C.F.R. § 292.205(d)(3). Complete lines 11g through 11j *even if you do not intend to rely upon the fundamental use test to demonstrate compliance with 18 C.F.R. § 292.205(d)(2).*

11g Amount of electrical, thermal, chemical and mechanical energy output (net of internal generation plant losses and parasitic loads) expected to be used annually for industrial, commercial, residential or institutional purposes and not sold to an electric utility	453,505 MWh
11h Total amount of electrical, thermal, chemical and mechanical energy expected to be sold to an electric utility	13,753 MWh
11i Percentage of total annual energy output expected to be used for industrial, commercial, residential or institutional purposes and not sold to a utility = 100 * 11g /(11g + 11h)	97.1 %

11j Is the response in line 11i greater than or equal to 50 percent?

☒ Yes. Your facility complies with 18 C.F.R. § 292.205(d)(2) by virtue of passing the fundamental use test provided in 18 C.F.R. § 292.205(d)(3). Applicant certifies its understanding that, if it is to rely upon passing the fundamental use test as a basis for complying with 18 C.F.R. § 292.205(d)(2), then the facility must comply with the fundamental use test both in the 12-month period beginning with the date the facility first produces electric energy, and in all subsequent calendar years.

☐ No. Your facility does not pass the fundamental use test. Instead, you must provide in the Miscellaneous section starting on page 19 a narrative explanation of and support for why your facility meets the requirement that the electrical, thermal, chemical and mechanical output of an EPAct 2005 cogeneration facility is used fundamentally for industrial, commercial, residential or institutional purposes and is not intended fundamentally for sale to an electric utility, taking into account technological, efficiency, economic, and variable thermal energy requirements, as well as state laws applicable to sales of electric energy from a QF to its host facility. Applicants providing a narrative explanation of why their facility should be found to comply with 18 C.F.R. § 292.205(d)(2) in spite of non-compliance with the fundamental use test may want to review paragraphs 47 through 61 of Order No. 671 (accessible from the Commission's QF website at www.ferc.gov/QF), which provide discussion of the facts and circumstances that may support their explanation. Applicant should also note that the percentage reported above will establish the standard that that facility must comply with, both for the 12-month period beginning with the date the facility first produces electric energy, and in all subsequent calendar years. *See* Order No. 671 at paragraph 51. As such, the applicant should make sure that it reports appropriate values on lines 11g and 11h above to serve as the relevant annual standard, taking into account expected variations in production conditions.

Information Required for Topping-Cycle Cogeneration Facility

If you indicated in line 10a that your facility represents topping-cycle cogeneration technology, then you must respond to the items on pages 14 and 15. Otherwise, skip pages 14 and 15.

Usefulness of Topping-Cycle Thermal Output

The thermal energy output of a topping-cycle cogeneration facility is the net energy made available to an industrial or commercial process or used in a heating or cooling application. Pursuant to sections 292.202(c), (d) and (h) of the Commission's regulations (18 C.F.R. §§ 292.202(c), (d) and (h)), the thermal energy output of a qualifying topping-cycle cogeneration facility must be useful. In connection with this requirement, describe the thermal output of the topping-cycle cogeneration facility by responding to lines 12a and 12b below.

12a Identify and describe each thermal host, and specify the annual average rate of thermal output made available to each host for each use. For hosts with multiple uses of thermal output, provide the data for each use *in separate rows.*

	Name of entity (thermal host) taking thermal output	Thermal host's relationship to facility; Thermal host's use of thermal output	Average annual rate of thermal output attributable to use (net of heat contained in process return or make-up water)
1)	Buckeye 150 PSIG Users	Applicant or affiliate Industrial process - chemical (not petroleum)	438,410 Btu/h
2)	Buckeye 50 PSIG Users	Applicant or affiliate Industrial process - chemical (not petroleum)	841,776 Btu/h
3)		Select thermal host's relationship to facility Select thermal host's use of thermal output	Btu/h
4)		Select thermal host's relationship to facility Select thermal host's use of thermal output	Btu/h
5)		Select thermal host's relationship to facility Select thermal host's use of thermal output	Btu/h
6)		Select thermal host's relationship to facility Select thermal host's use of thermal output	Btu/h

☐ Check here and continue in the Miscellaneous section starting on page 19 if additional space is needed

12b Demonstration of usefulness of thermal output: At a minimum, provide a brief description of each use of the thermal output identified above. In some cases, this brief description is sufficient to demonstrate usefulness. However, if your facility's use of thermal output is not common, and/or if the usefulness of such thermal output is not reasonably clear, then you must provide additional details as necessary to demonstrate usefulness. Your application may be rejected and/or additional information may be required if an insufficient showing of usefulness is made. (Exception: If you have previously received a Commission certification approving a specific use of thermal output related to the instant facility, then you need only provide a brief description of that use and a reference by date and docket number to the order certifying your facility with the indicated use. Such exemption may not be used if any change creates a material deviation from the previously authorized use.) If additional space is needed, continue in the Miscellaneous section starting on page 19.

Buckeye utilizes thermal output, in the form of steam, throughout its cellulose fiber production process. Steam from items 12.a.1 (150 PSIG steam) and 12.a.2 (50 PSIG steam) above are products of either extraction or exhaust steam from a number of turbine generators or mechanical drive turbines. 150 PSIG steam is used primarily to provide the heat source for batch digesting in the pulping process, sheet drying in the pulp drying process and pump and fan operation in the power production process. 50 PSIG steam is used primarily in the black liquor evaporation process and as a liquor or water heater for various mill usage.

Topping-Cycle Operating and Efficiency Value Calculation

Applicants for facilities representing topping-cycle technology must demonstrate compliance with the topping-cycle operating standard and, if applicable, efficiency standard. Section 292.205(a)(1) of the Commission's regulations (18 C.F.R. § 292.205(a)(1)) establishes the operating standard for topping-cycle cogeneration facilities: the useful thermal energy output must be no less than 5 percent of the total energy output. Section 292.205(a)(2) (18 C.F.R. § 292.205(a)(2)) establishes the efficiency standard for topping-cycle cogeneration facilities for which installation commenced on or after March 13, 1980: the useful power output of the facility plus one-half the useful thermal energy output must (A) be no less than 42.5 percent of the total energy input of natural gas and oil to the facility; and (B) if the useful thermal energy output is less than 15 percent of the total energy output of the facility, be no less than 45 percent of the total energy input of natural gas and oil to the facility. To demonstrate compliance with the topping-cycle operating and/or efficiency standards, or to demonstrate that your facility is exempt from the efficiency standard based on the date that installation commenced, respond to lines 13a through 13l below.

If you indicated in line 10a that your facility represents *both* topping-cycle and bottoming-cycle cogeneration technology, then respond to lines 13a through 13l below considering only the energy inputs and outputs attributable to the topping-cycle portion of your facility. Your mass and heat balance diagram must make clear which mass and energy flow values and system components are for which portion (topping or bottoming) of the cogeneration system.

13a Indicate the annual average rate of useful thermal energy output made available to the host(s), net of any heat contained in condensate return or make-up water	1,156,710,460 Btu/h
13b Indicate the annual average rate of net electrical energy output	43,160 kW
13c Multiply line 13b by 3,412 to convert from kW to Btu/h	147,261,920 Btu/h
13d Indicate the annual average rate of mechanical energy output taken directly off of the shaft of a prime mover for purposes not directly related to power production (this value is usually zero)	0 hp
13e Multiply line 13d by 2,544 to convert from hp to Btu/h	0.0 Btu/h
13f Indicate the annual average rate of energy input from natural gas and oil	272,300,000 Btu/h
13g Topping-cycle operating value = 100 * 13a / (13a + 13c + 13e)	88.7 %
13h Topping-cycle efficiency value = 100 * (0.5*13a + 13c + 13e) / 13f	100 %

13i Compliance with operating standard: Is the operating value shown in line 13g greater than or equal to 5%?

☒ Yes (complies with operating standard) ☐ No (does not comply with operating standard)

13j Did installation of the facility in its current form commence on or after March 13, 1980?

☒ Yes. Your facility is subject to the efficiency requirements of 18 C.F.R. § 292.205(a)(2). Demonstrate compliance with the efficiency requirement by responding to line 13k or 13l, as applicable, below.

☐ No. Your facility is exempt from the efficiency standard. Skip lines 13k and 13l.

13k Compliance with efficiency standard (for low operating value): If the operating value shown in line 13g is less than 15%, then indicate below whether the efficiency value shown in line 13h greater than or equal to 45%:

☐ Yes (complies with efficiency standard) ☐ No (does not comply with efficiency standard)

13l Compliance with efficiency standard (for high operating value): If the operating value shown in line 13g is greater than or equal to 15%, then indicate below whether the efficiency value shown in line 13h is greater than or equal to 42.5%:

☒ Yes (complies with efficiency standard) ☐ No (does not comply with efficiency standard)

Information Required for Bottoming-Cycle Cogeneration Facility

If you indicated in line 10a that your facility represents bottoming-cycle cogeneration technology, then you must respond to the items on pages 16 and 17. Otherwise, skip pages 16 and 17.

Usefulness of Bottoming-Cycle Thermal Output

The thermal energy output of a bottoming-cycle cogeneration facility is the energy related to the process(es) from which at least some of the reject heat is then used for power production. Pursuant to sections 292.202(c) and (e) of the Commission's regulations (18 C.F.R. § 292.202(c) and (e)), the thermal energy output of a qualifying bottoming-cycle cogeneration facility must be useful. In connection with this requirement, describe the process(es) from which at least some of the reject heat is used for power production by responding to lines 14a and 14b below.

14a Identify and describe each thermal host and each bottoming-cycle cogeneration process engaged in by each host. For hosts with multiple bottoming-cycle cogeneration processes, provide the data for each process *in separate rows*.

	Name of entity (thermal host) performing the process from which at least some of the reject heat is used for power production	Thermal host's relationship to facility; Thermal host's process type	Has the energy input to the thermal host been augmented for purposes of increasing power production capacity? (if Yes, describe on p. 19)
1)		Select thermal host's relationship to facility Select thermal host's process type	Yes ☐ No ☐
2)		Select thermal host's relationship to facility Select thermal host's process type	Yes ☐ No ☐
3)		Select thermal host's relationship to facility Select thermal host's process type	Yes ☐ No ☐

☐ Check here and continue in the Miscellaneous section starting on page 19 if additional space is needed

14b Demonstration of usefulness of thermal output: At a minimum, provide a brief description of each process identified above. In some cases, this brief description is sufficient to demonstrate usefulness. However, if your facility's process is not common, and/or if the usefulness of such thermal output is not reasonably clear, then you must provide additional details as necessary to demonstrate usefulness. Your application may be rejected and/or additional information may be required if an insufficient showing of usefulness is made. (Exception: If you have previously received a Commission certification approving a specific bottoming-cycle process related to the instant facility, then you need only provide a brief description of that process and a reference by date and docket number to the order certifying your facility with the indicated process. Such exemption may not be used if any material changes to the process have been made.) If additional space is needed, continue in the Miscellaneous section starting on page 19.

Bottoming-Cycle Operating and Efficiency Value Calculation

Applicants for facilities representing bottoming-cycle technology and for which installation commenced on or after March 13, 1990 must demonstrate compliance with the bottoming-cycle efficiency standards. Section 292.205(b) of the Commission's regulations (18 C.F.R. § 292.205(b)) establishes the efficiency standard for bottoming-cycle cogeneration facilities: the useful power output of the facility must be no less than 45 percent of the energy input of natural gas and oil for supplementary firing. To demonstrate compliance with the bottoming-cycle efficiency standard (if applicable), or to demonstrate that your facility is exempt from this standard based on the date that installation of the facility began, respond to lines 15a through 15h below.

If you indicated in line 10a that your facility represents *both* topping-cycle and bottoming-cycle cogeneration technology, then respond to lines 15a through 15h below considering only the energy inputs and outputs attributable to the bottoming-cycle portion of your facility. Your mass and heat balance diagram must make clear which mass and energy flow values and system components are for which portion of the cogeneration system (topping or bottoming).

15a Did installation of the facility in its current form commence on or after March 13, 1980?

☐ Yes. Your facility is subject to the efficiency requirement of 18 C.F.R. § 292.205(b). Demonstrate compliance with the efficiency requirement by responding to lines 15b through 15h below.

☐ No. Your facility is exempt from the efficiency standard. Skip the rest of page 17.

15b Indicate the annual average rate of net electrical energy output	kW
15c Multiply line 15b by 3,412 to convert from kW to Btu/h	0 Btu/h
15d Indicate the annual average rate of mechanical energy output taken directly off of the shaft of a prime mover for purposes not directly related to power production (this value is usually zero)	hp
15e Multiply line 15d by 2,544 to convert from hp to Btu/h	0 Btu/h
15f Indicate the annual average rate of supplementary energy input from natural gas or oil	Btu/h
15g Bottoming-cycle efficiency value = 100 * (15c + 15e) / 15f	0 %

15h Compliance with efficiency standard: Indicate below whether the efficiency value shown in line 15g is greater than or equal to 45%:

☐ Yes (complies with efficiency standard) ☐ No (does not comply with efficiency standard)

Certificate of Completeness, Accuracy and Authority

Applicant must certify compliance with and understanding of filing requirements by checking next to each item below and signing at the bottom of this section. Forms with incomplete Certificates of Completeness, Accuracy and Authority will be rejected by the Secretary of the Commission.

Signer identified below certifies the following: (check all items and applicable subitems)

☒ He or she has read the filing, including any information contained in any attached documents, such as cogeneration mass and heat balance diagrams, and any information contained in the Miscellaneous section starting on page 19, and knows its contents.

☒ He or she has provided all of the required information for certification, and the provided information is true as stated, to the best of his or her knowledge and belief.

☒ He or she possess full power and authority to sign the filing; as required by Rule 2005(a)(3) of the Commission's Rules of Practice and Procedure (18 C.F.R. § 385.2005(a)(3)), he or she is one of the following: (check one)

- ☐ The person on whose behalf the filing is made
- ☒ An officer of the corporation, trust, association, or other organized group on behalf of which the filing is made
- ☐ An officer, agent, or employe of the governmental authority, agency, or instrumentality on behalf of which the filing is made
- ☐ A representative qualified to practice before the Commission under Rule 2101 of the Commission's Rules of Practice and Procedure (18 C.F.R. § 385.2101) and who possesses authority to sign

☒ He or she has reviewed all automatic calculations and agrees with their results, unless otherwise noted in the Miscellaneous section starting on page 19.

☒ He or she has provided a copy of this Form 556 and all attachments to the utilities with which the facility will interconnect and transact (see lines 4a through 4d), as well as to the regulatory authorities of the states in which the facility and those utilities reside. See the Required Notice to Public Utilities and State Regulatory Authorities section on page 3 for more information.

Provide your signature, address and signature date below. Rule 2005(c) of the Commission's Rules of Practice and Procedure (18 C.F.R. § 385.2005(c)) provides that persons filing their documents electronically may use typed characters representing his or her name to sign the filed documents. A person filing this document electronically should sign (by typing his or her name) in the space provided below.

Your Signature	Your address	Date
Sheila Jordan Cunningham - See Miscellaneous, page 19	P.O. Box 80407, 1001 Tillman St., Memphis, TN 38108-0407	10/19/2012

Audit Notes

Commission Staff Use Only: ☐

Miscellaneous

Use this space to provide any information for which there was not sufficient space in the previous sections of the form to provide. For each such item of information *clearly identify the line number that the information belongs to.* You may also use this space to provide any additional information you believe is relevant to the certification of your facility.

Your response below is not limited to one page. Additional page(s) will automatically be inserted into this form if the length of your response exceeds the space on this page. Use as many pages as you require.

Description of biomass fuel sources from line 6a:
Black Liquor (spent pulping liquor from the Kraft pulping process); wood residue from wood yard operations; and purchased wood fuel.

Information related to the Signature on page 18:
Signed by Sheila Jordan Cunningham, as Corporate Secretary of Buckeye Florida Corporation, sole general partner of Buckeye Florida, Limited Partnership, a Delaware limited partnership, on behalf of the partnership.

Foley Steam Generation and Steam Usage Diagram - FORM 556

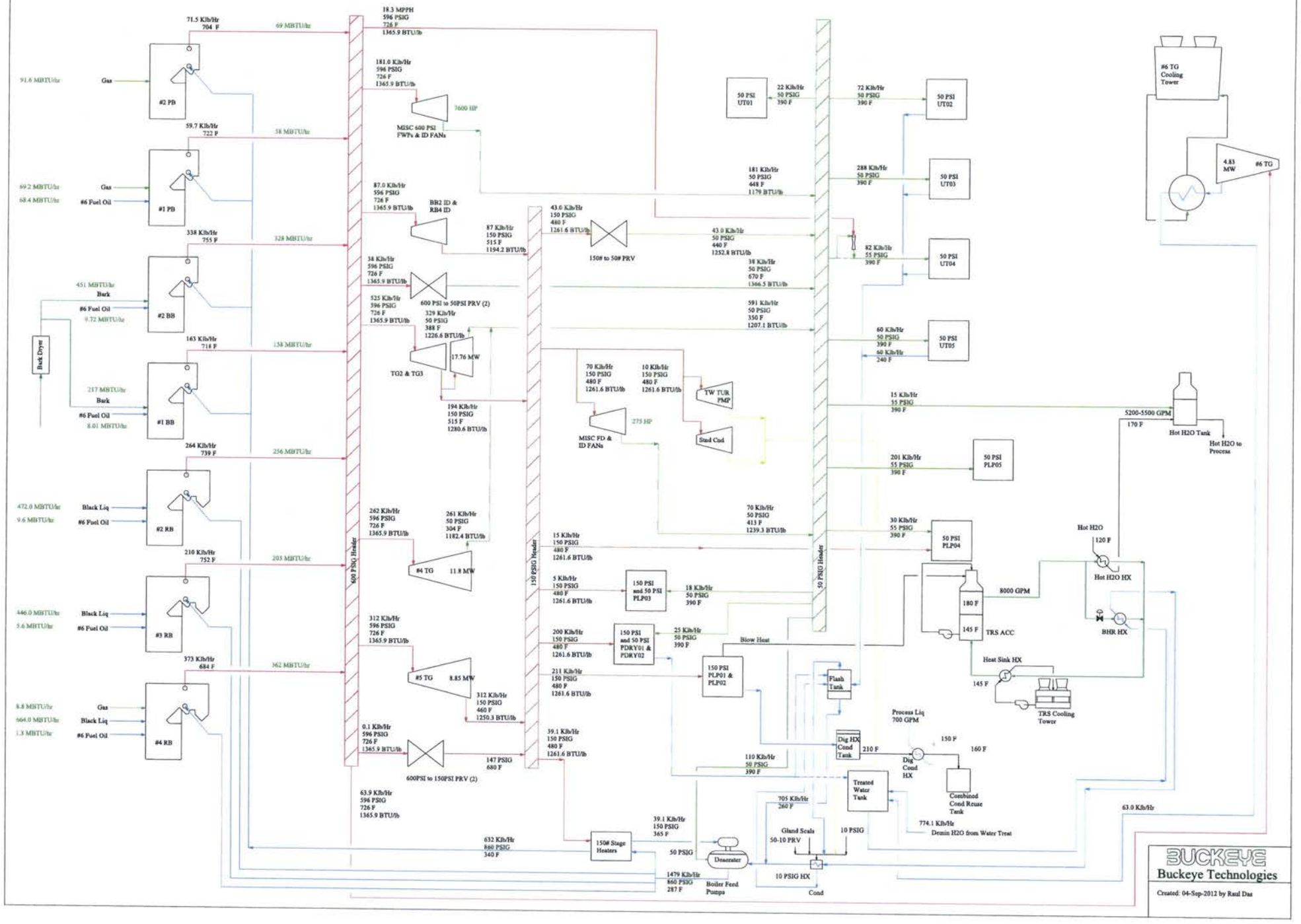

BUCKEYE
Buckeye Technologies

Created: 04-Sep-2012 by Raul Das